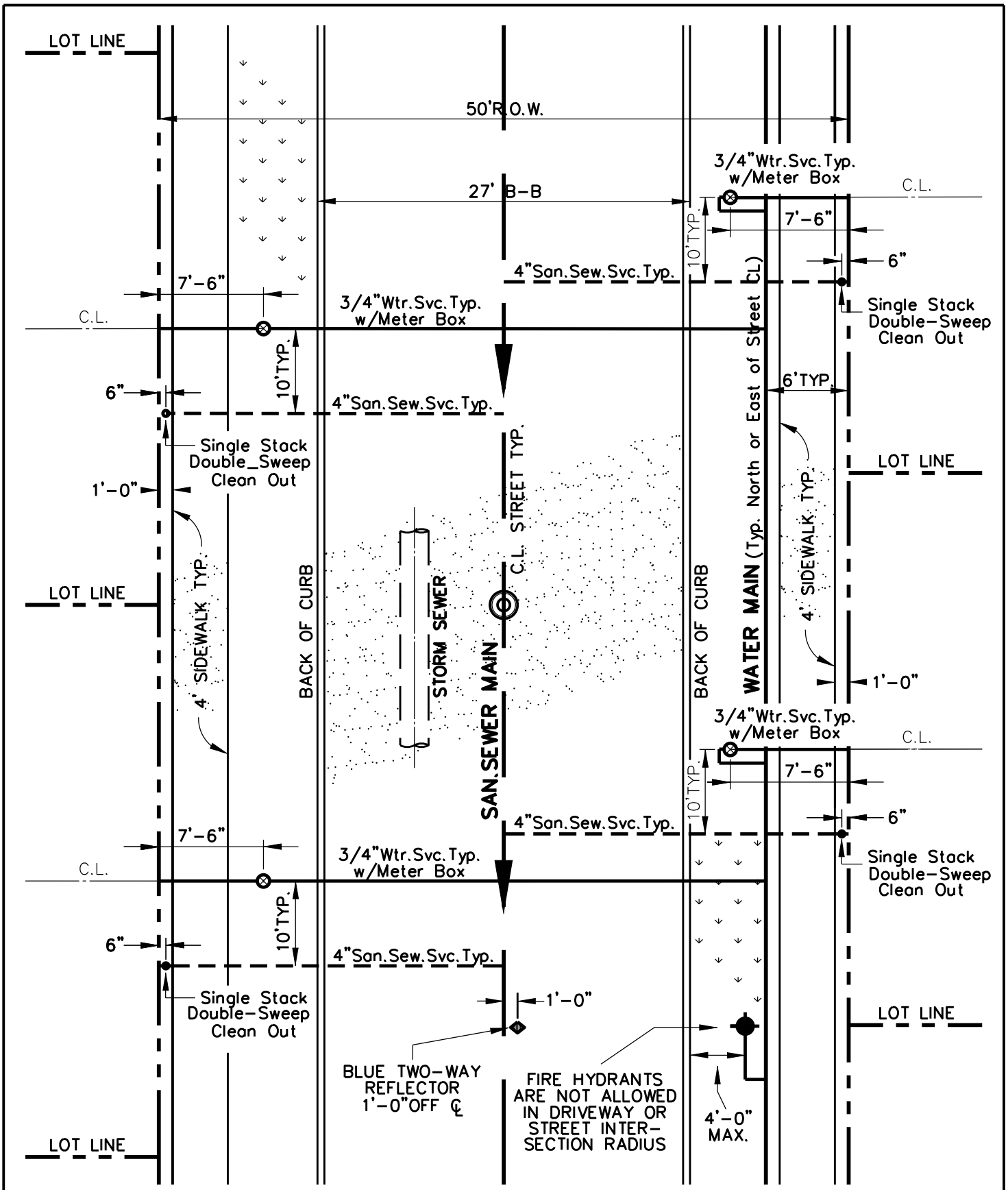


**NOTE:**

METERS AND FIRE HYDRANTS ARE NOT ALLOWED IN CONCRETE PAVEMENT.

1/1

Revision Date: 10/14

| | | | |
|---|---|---|---|
| Scale : N/A Date : 02/24/06 | GARLAND ENGINEERING | TYPICAL RESIDENTIAL WATER & SAN. SEWER CONNECTION DETAIL | PAGE 1 |
| Design : | | | |
| Drawn : JMK | | | |
| Dwg. File : SER_001.DWG | | | |
| Project No. : STANDARD-DETAILS | STANDARD DETAILS | | |

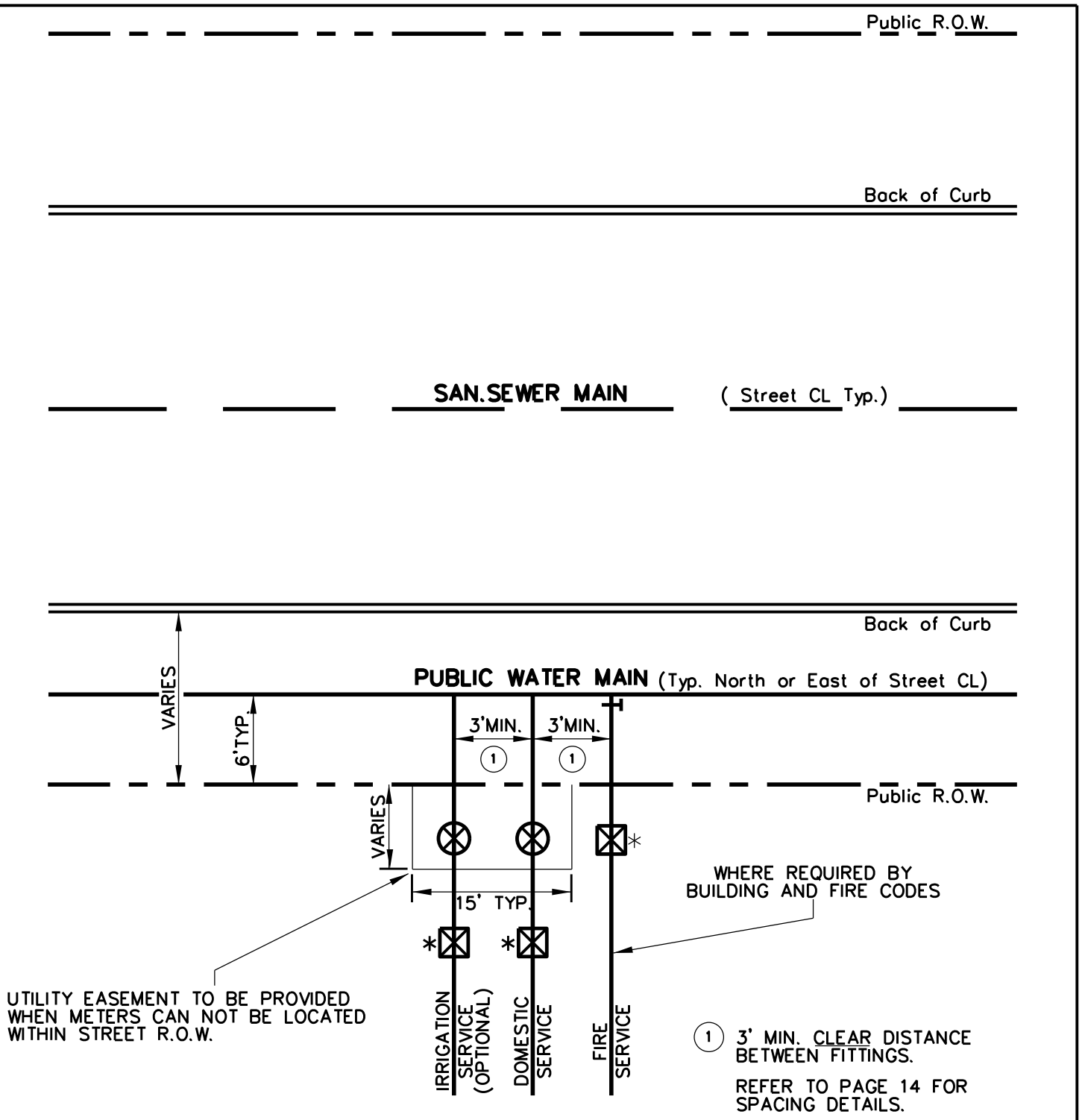


* **NOTE:**

APPROVED BACKFLOW DEVICE REQUIRED ON ALL SETUPS TO MEET CITY OF GARLAND BACKFLOW REQUIREMENTS.

PURSUANT TO THE CITY OF GARLAND CODE OF ORDINANCES, ARTICLE V, SECTION 51.72 (A)(1), CROSS CONNECTION CONTROL; "A BACKFLOW PREVENTION ASSEMBLY SHALL BE TESTED IMMEDIATELY AFTER INSTALLATION." TEST RESULTS MUST BE SUBMITTED TO WATER SYSTEM ANALYST WITHIN 48 HOURS OF INSTALLATION OF DEVICE. FOR A LIST OF A REGISTERED TESTER IN THE CITY OF GARLAND, CALL WATER SYSTEM ANALYST @ 972 205-3214.

1/1

Revision Date: 09/06

| | | | |
|---|---|---|---|
| Scale : N/A Date : 02/24/06 | GARLAND ENGINEERING STANDARD DETAILS | NON-RESIDENTIAL WATER SERVICE CONNECTION DETAIL | PAGE 2 |
| Design : | | | |
| Drawn : JMK | | | |
| Dwg. File : SER_001.DWG | | | |
| Project No. : STANDARD-DETAILS | | | |

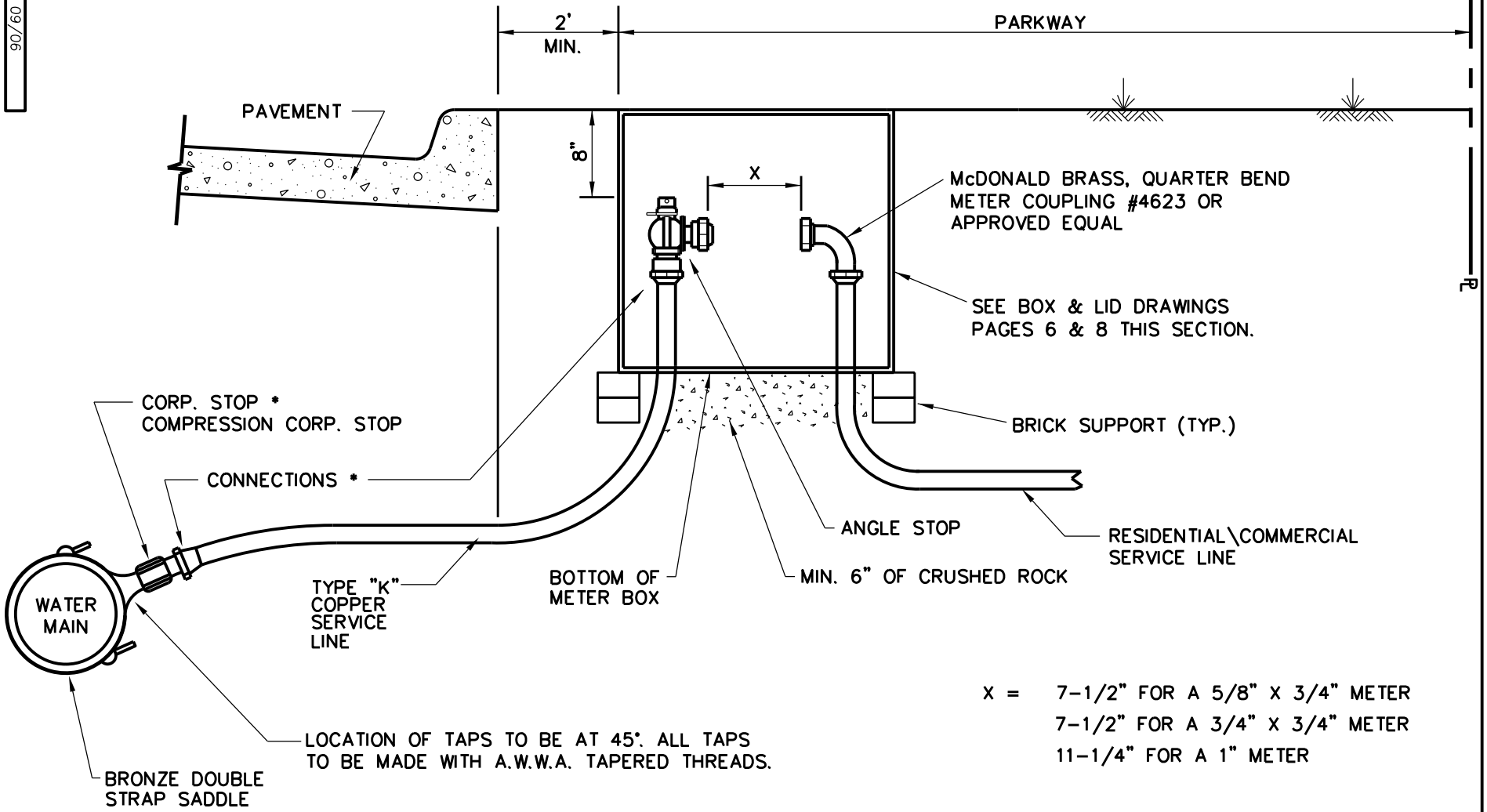


X = 7-1/2" FOR A 5/8" X 3/4" METER
7-1/2" FOR A 3/4" X 3/4" METER
11-1/4" FOR A 1" METER

NOTE: METER BOX SHALL BE LOCATED A MIN. OF 2' FROM ANY PAVING, SIDEWALK OR DRIVE APPROACHES.

* CONNECTIONS TO BE COMPRESSION FITTING WITH INTERNAL METALLIC GRIP RING.

1/2

# WATER SERVICE INSTALLATION 3/4" OR 1" LINE

GARLAND ENGINEERING

STANDARD DETAILS

| | |
|---|---|
| Scale : N/A | Date : 06/01/05 |
| Design : | |
| Drawn : GAV | |
| Dwg. File : SER_001.DWG | |
| Project No. : STANDARD-DETAILS | |

Revision Date: 09/06

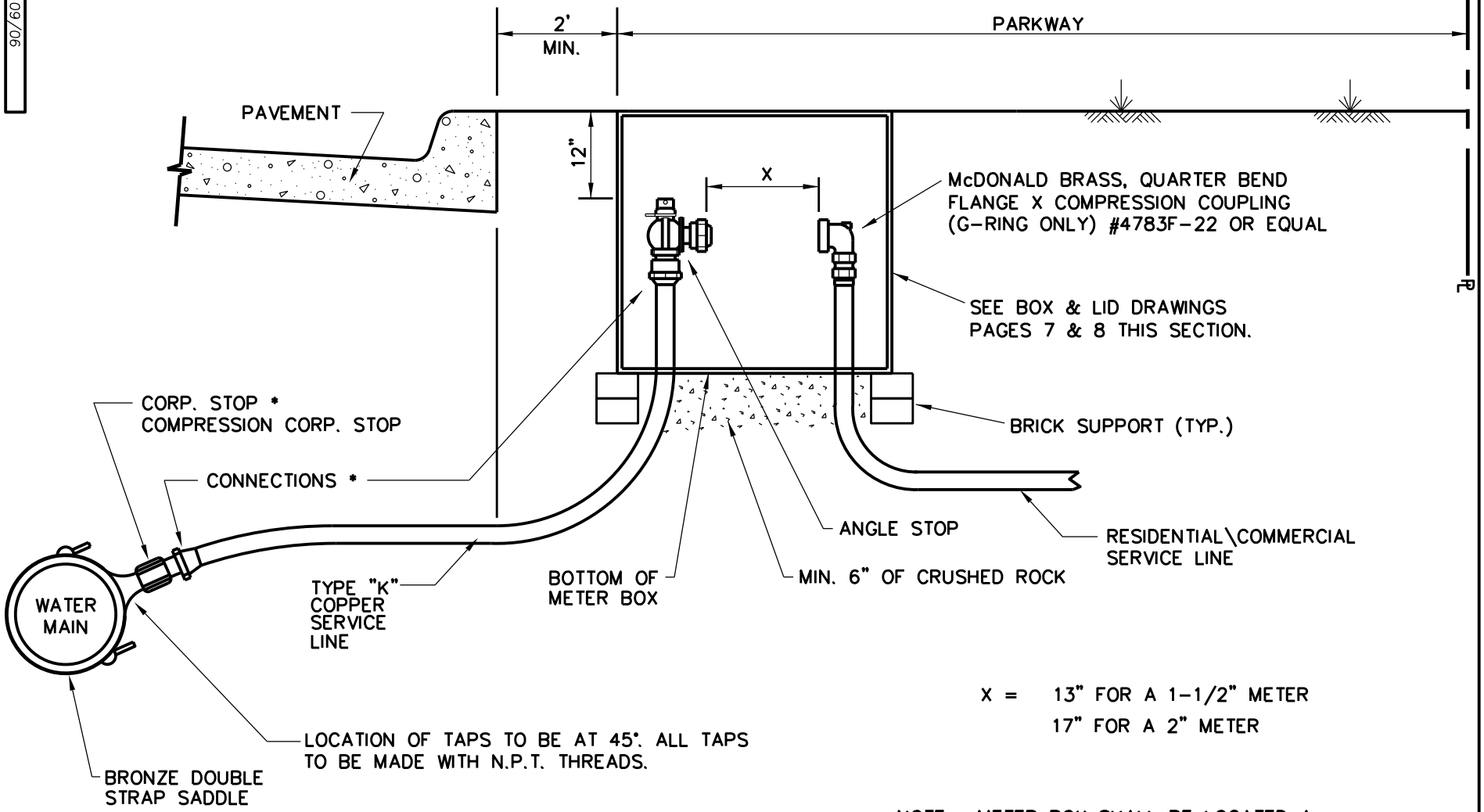


X = 13" FOR A 1-1/2" METER
17" FOR A 2" METER

NOTE: METER BOX SHALL BE LOCATED A MIN. OF 2' FROM ANY PAVING, SIDEWALK OR DRIVE APPROACHES.

NO 1-1/2" COPPER ON CITY SIDE, 1-1/2" METER WILL CONNECT TO 2" CURBSTOP.

* CONNECTIONS TO BE COMPRESSION FITTING WITH INTERNAL METALLIC GRIP RING.

Revision Date: 09/06

Scale : N/A Date : 06/01/05
Design :
Drawn : GAV
Dwg. File : SER_001.DWG
Project No. : STANDARD-DETAILS

GARLAND ENGINEERING
STANDARD DETAILS

# WATER SERVICE INSTALLATION 2" LINE

2/2

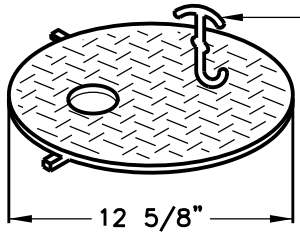


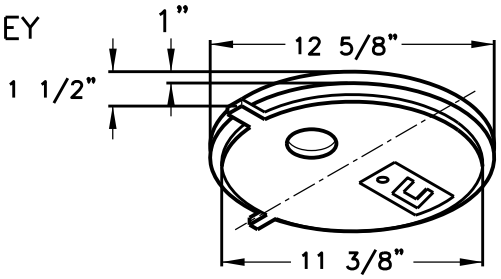


**TOP VIEW**

**BOTTOM VIEW**

DFW18AMR-1BA%T 100-LID

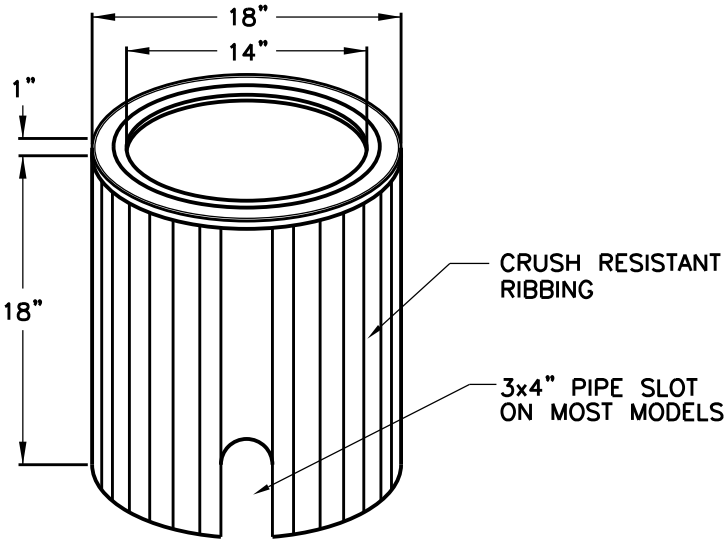


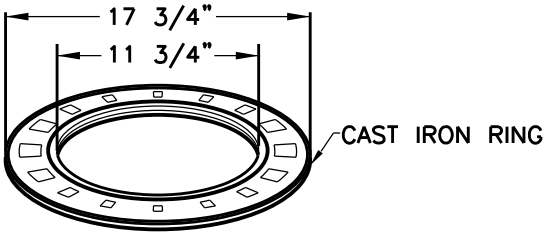


METER BOX SHALL BE "F" SERIES BY DFW PLASTICS INC. OR APPROVED EQUAL.
ALL SPECS ARE SUBJECT TO CHANGE WITHOUT NOTICE.

| Part No. | Series | Size | Height | ID | OD |
|---|---|---|---|---|---|
| DFW-1818F | F | 18x18" | 18" | 14" | 18" |
| DFW-1818-PLCIR | F | 18x18" | 18" | 14" | 18" |
| DFW-18RING | F | 18" | 1 1/2" | 11 3/4" | 17 3/4" |
| DFW18AMR-1BA%T 100-LID | F | 12" | 1 1/2" | | |

* SEE SHEET 4 FOR LID AND BODY DETAILS

1/4

Revision Date: 04/19

| | | | |
|---|---|---|---|
| Scale : N/A Date : 06/01/05 | GARLAND ENGINEERING STANDARD DETAILS | BOX AND LID FOR 5/8" & 3/4" METERS | PAGE 5 |
| Design : | | | |
| Drawn : DCN | | | |
| Dwg. File : SER_002.DWG | | | |
| Project No. : STANDARD-DETAILS | | | |

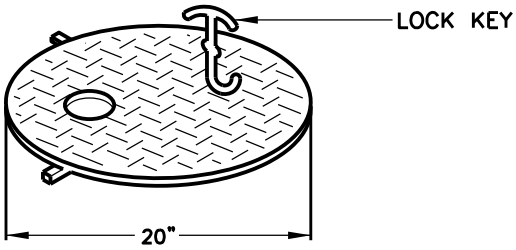


**TOP VIEW**

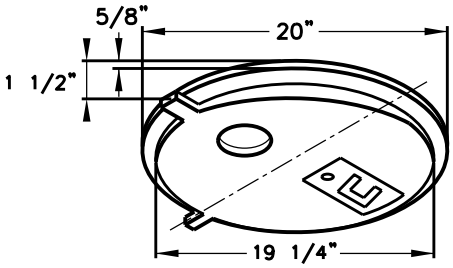


**BOTTOM VIEW**

DFW20AMR-1BA%T 100-LID

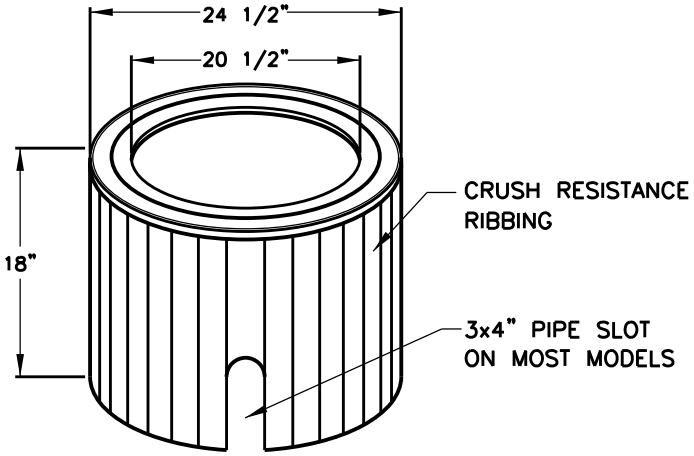


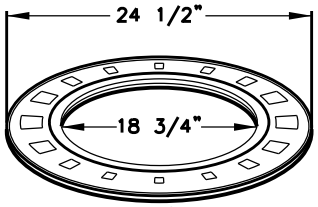


24" CAST IRON RING

METER BOX SHALL BE "F" SERIES BY DFW PLASTICS INC. OR APPROVED EQUAL.
ALL SPECS ARE SUBJECT TO CHANGE WITHOUT NOTICE.

| Part No. | Series | Size | Height | ID | OD |
|---|---|---|---|---|---|
| DFW-2418F | F | 24x18" | 18" | 20 1/2" | 24 1/2" |
| DFW-2418-PLCIR | F | 24x18" | 18" | 20 1/2" | 24 1/2" |
| DFW-24RING | F | 24" | 1 1/2" | 20 1/4" | 24" |
| DFW20AMR-1BA%T 100-LID | F | 20" | 1 1/2" | | |

* SEE SHEET 4 FOR LID AND BODY DETAILS.

2/4

Revision Date: 04/19

| | | | |
|---|---|---|---|
| Scale : N/A Date : 06/01/05 | GARLAND ENGINEERING STANDARD DETAILS | BOX AND LID FOR 1" METERS | PAGE 6 |
| Design : | | | |
| Drawn : DCN | | | |
| Dwg. File : SER_004.DWG | | | |
| Project No. : STANDARD-DETAILS | | | |

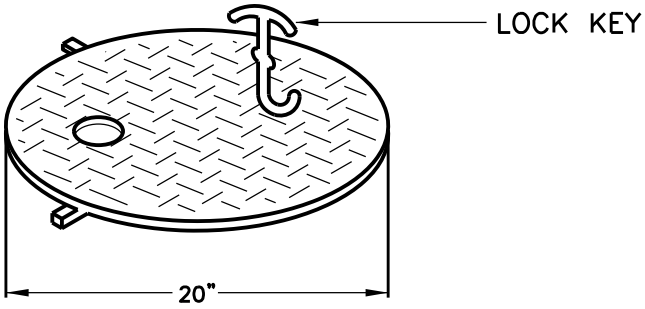


**TOP VIEW**

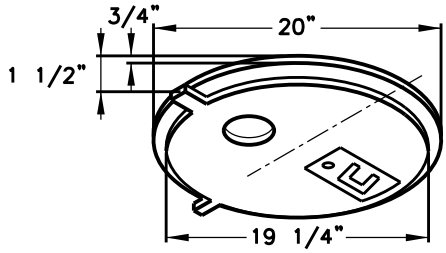


**BOTTOM VIEW**

DFW20AMR-1BA%T 100-LID

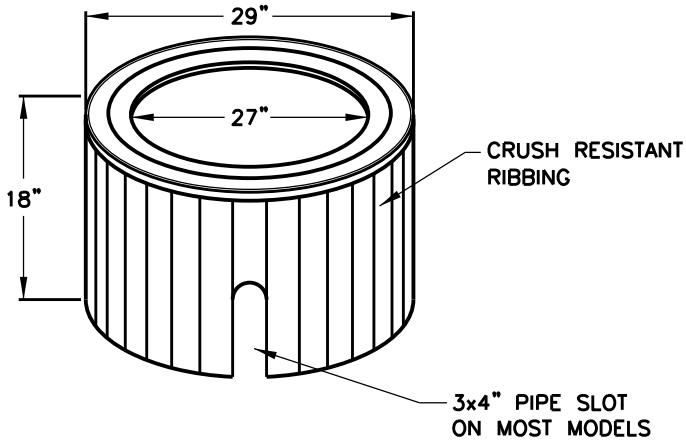


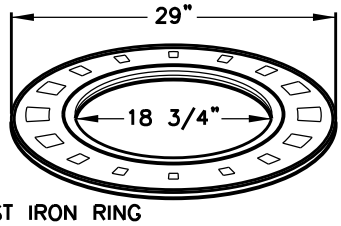


28" CAST IRON RING

METER BOX SHALL BE "F" SERIES BY DFW PLASTICS INC. OR APPROVED EQUAL.
ALL SPECS ARE SUBJECT TO CHANGE WITHOUT NOTICE.

| Part No. | Series | Size | Height | ID | OD |
|---|---|---|---|---|---|
| DFW-2818F | F | 28x18" | 18" | 27" | 29" |
| DFW-2818-PLCIR | F | 28x18" | 18" | 27" | 29" |
| DFW-28RING | F | 28" | 1 1/2" | 20 1/4" | 28" |
| DFW20AMR-1BA%T 100-LID | F | 20" | 1 1/2" | | |

* SEE SHEET 8 FOR LID AND BODY DETAILS

3/4

Revision Date: 04/19

| | | | |
|---|---|---|---|
| Scale : N/A Date : 06/01/05 | GARLAND ENGINEERING STANDARD DETAILS | BOX AND LID FOR 1-1/2" & 2" METER | PAGE 7 |
| Design : | | | |
| Drawn : DCN | | | |
| Dwg. File : SER_003.DWG | | | |
| Project No. : STANDARD-DETAILS | | | |

# NOTES

METER BOX SHALL BE BLACK AND CONSTRUCTED OUT OF MODIFIED POLYETHYLENE MATERIAL FOR MAXIMUM DURABILITY AND CORROSION RESISTANCE.

THE BLACK MATERIAL IS FOR MAXIMUM UV PROTECTION. THE BLACK MATERIAL SHALL BE UNIFORM THROUGHOUT THE METER BOX FOR MAXIMUM LONGEVITY AND NOT HAVE A FOAMING AGENT THAT CREATES AIR POCKETS WITHIN THE PLASTIC WALL.

## PLASTIC LID

- THE LID SHALL HAVE "WATER METER" MOLDED INTO THE LID WITH A DIAMOND PATTERN FOR SKID RESISTANCE.
- THE LID SHALL SEAT SECURELY AND EVENLY INSIDE THE CAST IRON RING.
- THE LID SHALL HAVE A SPRING LOADED PLASTIC LOCKING MECHANISM THAT USES A STANDARD BRASS KEY (MFG BY MIDLAND MFG. CO. #1414)

## PLASTIC BODY

- THE BODY SHALL HAVE CRUSH RESISTANT RIBBING ALONG THE OUTSIDE OF THE BOX WITH 2" BASE FOOTING LOCATED AT THE BOTTOM OF THE METER PIT TO HELP ELIMINATE SINKING OR FLOATING ONCE INSTALLED.
- THE BODY SHALL HAVE A PATENTED UNIVERSAL RING LOCATOR MOLDED INTO THE TOP OF THE METER PIT TO HELP SECURE CAST IRON RING (MFG BY SIGMA) ONTO TOP OF METER PIT WITH 4 COATED SELF TAPPING BOLTS.
- THE BODY SHALL HAVE ONE PIPE SLOT ON EACH END OF THE BODY THAT MEASURE 3"X4"



Revision Date: 08/06

| | | | |
|---|---|---|---|
| Scale : N/A Date : 06/01/05 | GARLAND ENGINEERING STANDARD DETAILS | GENERAL NOTES & LID AND BODY DETAILS | PAGE 8 |
| Design : | | | |
| Drawn : DCN | | | |
| Dwg. File : SER_005.DWG | | | |
| Project No. : STANDARD-DETAILS | | | |

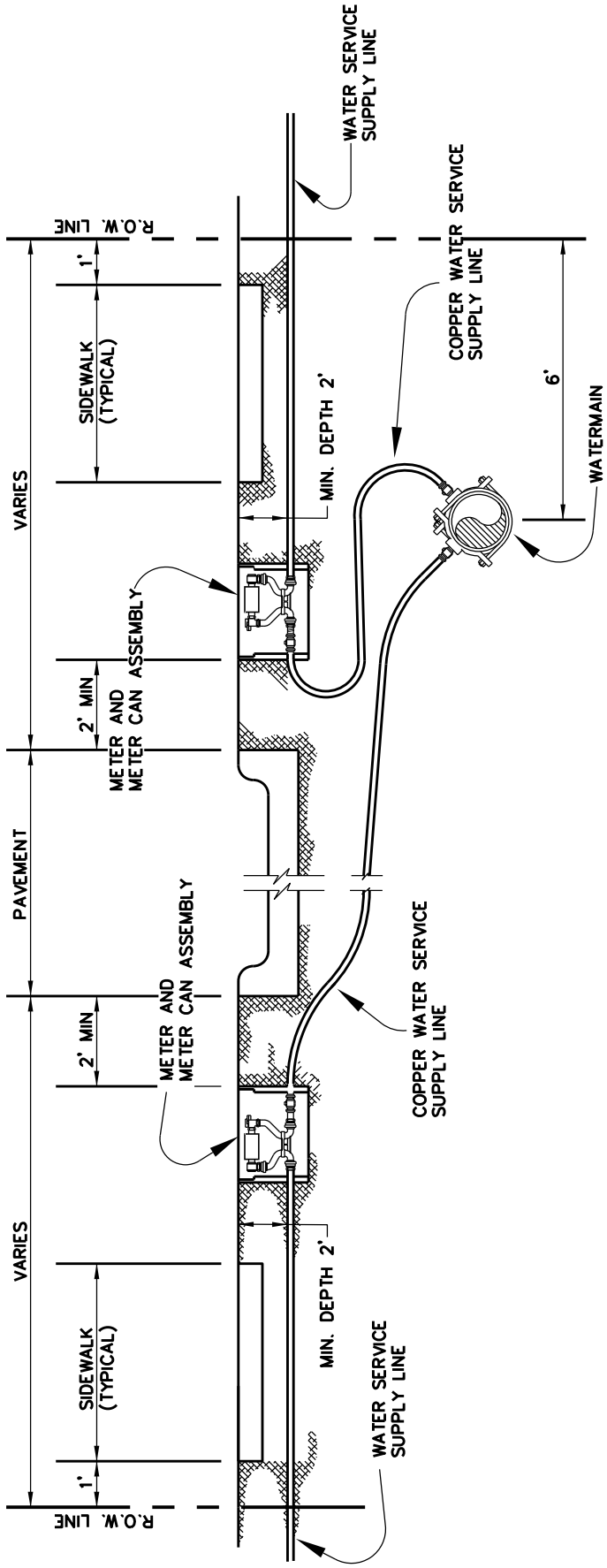


GENERAL DESIGN NOTES:
ALL NEW WATER MAINS SHALL BE LOCATED ON THE NORTH OR EAST SIDE OF THE STREET.

1/1

Revision Date: 12/11

| | | | |
|---|---|---|---|
| Scale : N/A Date : 06/01/05 | GARLAND ENGINEERING STANDARD DETAILS | WATER MAINS WITH WATER SERVICE SUPPLY LINES | PAGE 9 |
| Design : | | | |
| Drawn : JMK | | | |
| Dwg. File : SER_006.DWG | | | |
| Project No. : STANDARD-DETAILS | | | |

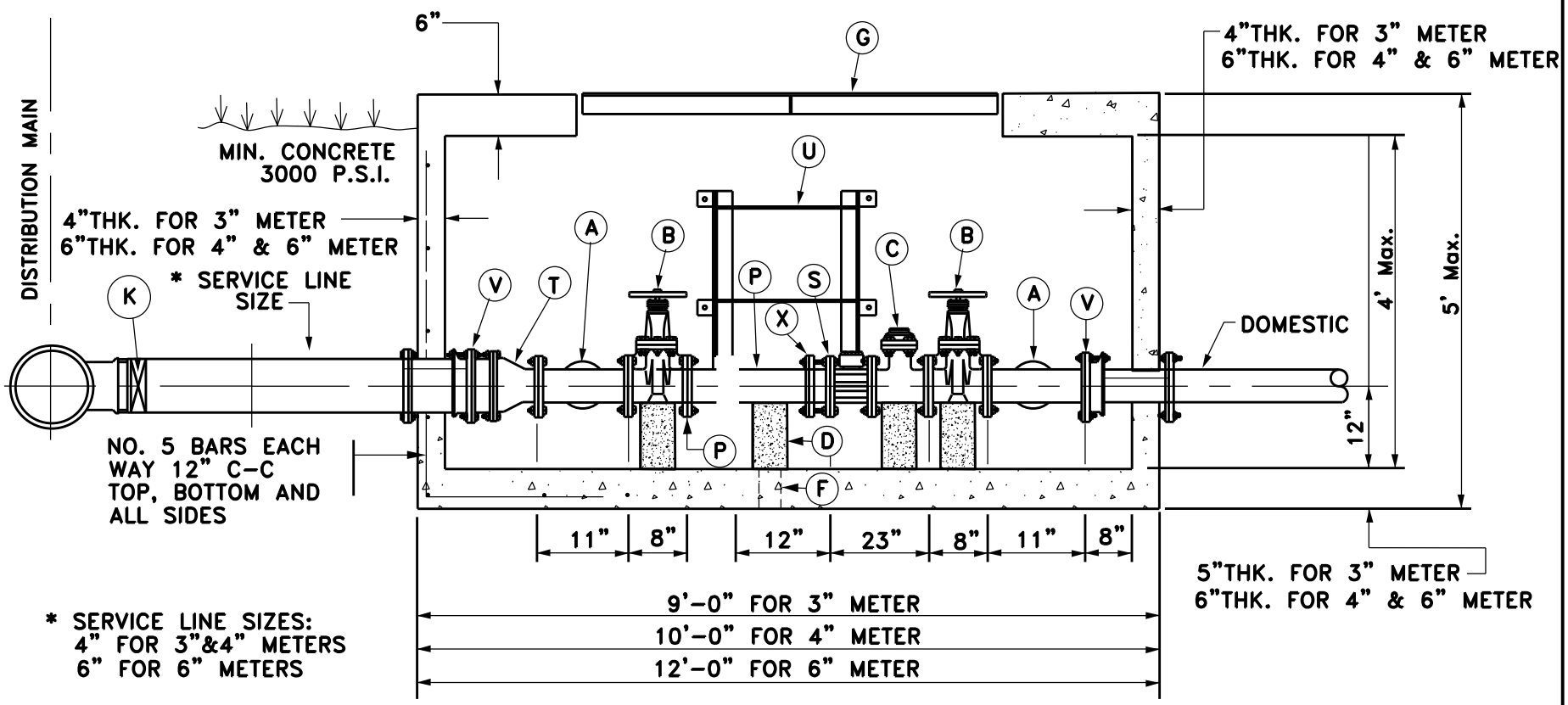


## SECTION A-A

| ITEM | DESCRIPTION | QTY. |
|---|---|---|
| A | TEE (3"x3"x2") (4"x4"x2") (6"x6"x3") | 2 EA. |
| B | GATE VALVE WITH WHEEL HANDLE | 2 EA. |
| C | WATER METER | 1 EA. |
| D | 4" x 4" CONCRETE SUPPORT | 7 EA. |
| F | 6" DIAMETER BY 3" DEEP SUMP HOLE | .05 C.F. |
| G | BILCO ACCESS DOOR-3'x5' TYPE Q/ APPROVED EQ. | 1 UNIT |
| K | GATE VALVE & VALVE BOX AT TEE | 1 EA. |
| L | 90° BEND (USE 3"x2" REDUCING BEND) FOR 3" METER | 2 EA. |
| M | GATE VALVE | 1 EA. |
| N | BY-PASS (2"FOR 3" & 4" ASS'Y. 3" FOR 6" ASS'Y. | 2 UNITS |
| P | FLANGE AND PLAIN END PIPE | 1 EA. |

| | | |
|---|---|---|
| S | STRAINER | 1 EA. |
| T | 4"x3" REDUCER (3" METER ASSEMBLY ONLY) | 1 EA. |
| U | PERM. ATTACH. ALUM. LADDER (REQ'D. IN VAULT OVER 2' DEEP) | 1 EA. |
| V | FLANGED COUPLING ADAPTER (SMITH BLAIR (#912) INSTALL MINIMUM OF TWO STAINLESS STEEL ALL THREAD RETAINER RODS WITH FLAT WASHERS AND HEX NUTS (ON EACH END) THROUGH VAULT WALL. RODS TO BE SAME DIAMETER AS FLANGE BOLTS. | 2 EA. |
| X | FLANGED COUPLING ADAPTER | 1 EA. |

1/3

Revision Date: 09/06

Scale : N/A Date : 06/01/05
Design :
Drawn : GAV
Dwg. File : SER_007.DWG
Project No. : STANDARD-DETAILS

GARLAND ENGINEERING
STANDARD DETAILS

# TYPICAL METER VAULT FOR 3", 4" & 6"

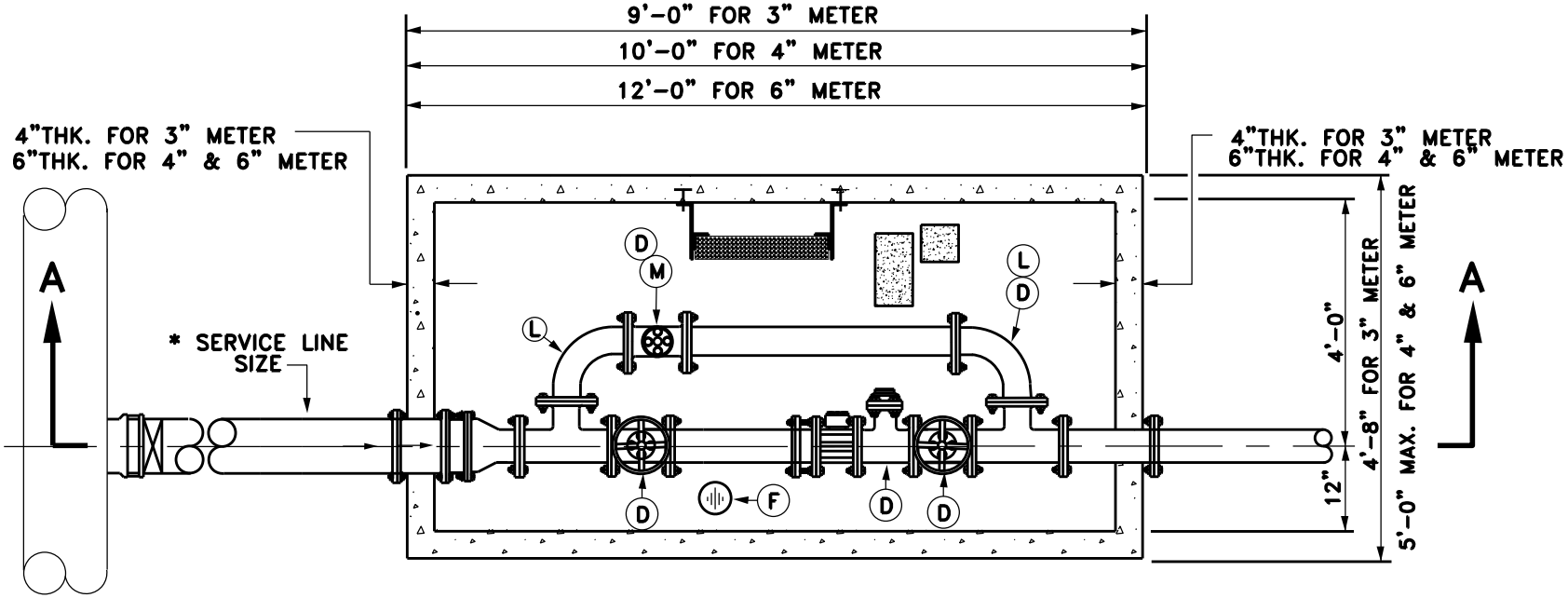


## PLAN

| ITEM | DESCRIPTION | QTY. |
|---|---|---|
| A | TEE (3"x3"x2") (4"x4"x2") (6"x6"x3") | 2 EA. |
| B | GATE VALVE WITH WHEEL HANDLE | 2 EA. |
| C | WATER METER | 1 EA. |
| D | 4" x 4" CONCRETE SUPPORT | 7 EA. |
| F | 6" DIAMETER BY 3" DEEP SUMP HOLE | .05 C.F. |
| G | BILCO ACCESS DOOR-3'x5' TYPE Q/ APPROVED EQ. | 1 UNIT |
| K | GATE VALVE & VALVE BOX AT TEE | 1 EA. |
| L | 90° BEND (USE 3"x2" REDUCING BEND) FOR 3" METER | 2 EA. |
| M | GATE VALVE | 1 EA. |
| N | BY-PASS (2"FOR 3" & 4" ASS'Y. 3" FOR 6" ASS'Y. | 2 UNITS |
| P | FLANGE AND PLAIN END PIPE | 1 EA. |
| S | STRAINER | 1 EA. |
| T | 4"x3" REDUCER (3" METER ASSEMBLY ONLY) | 1 EA. |
| U | PERM. ATTACH. ALUM. LADDER (REQ'D. IN VAULT OVER 2' DEEP) | 1 EA. |
| V | FLANGED COUPLING ADAPTER (SMITH BLAIR (#912) INSTALL MINIMUM OF TWO STAINLESS STEEL ALL THREAD RETAINER RODS WITH FLAT WASHERS AND HEX NUTS (ON EACH END) THROUGH VAULT WALL. RODS TO BE SAME DIAMETER AS FLANGE BOLTS. | 2 EA. |
| X | FLANGED COUPLING ADAPTER | 1 EA. |

Revision Date: 09/06

Scale : N/A Date : 06/01/05
Design :
Drawn : GAV
Dwg. File : SER_007.DWG
Project No. : STANDARD-DETAILS

GARLAND ENGINEERING
STANDARD DETAILS

# TYPICAL METER VAULT FOR 3", 4" & 6"

2/3

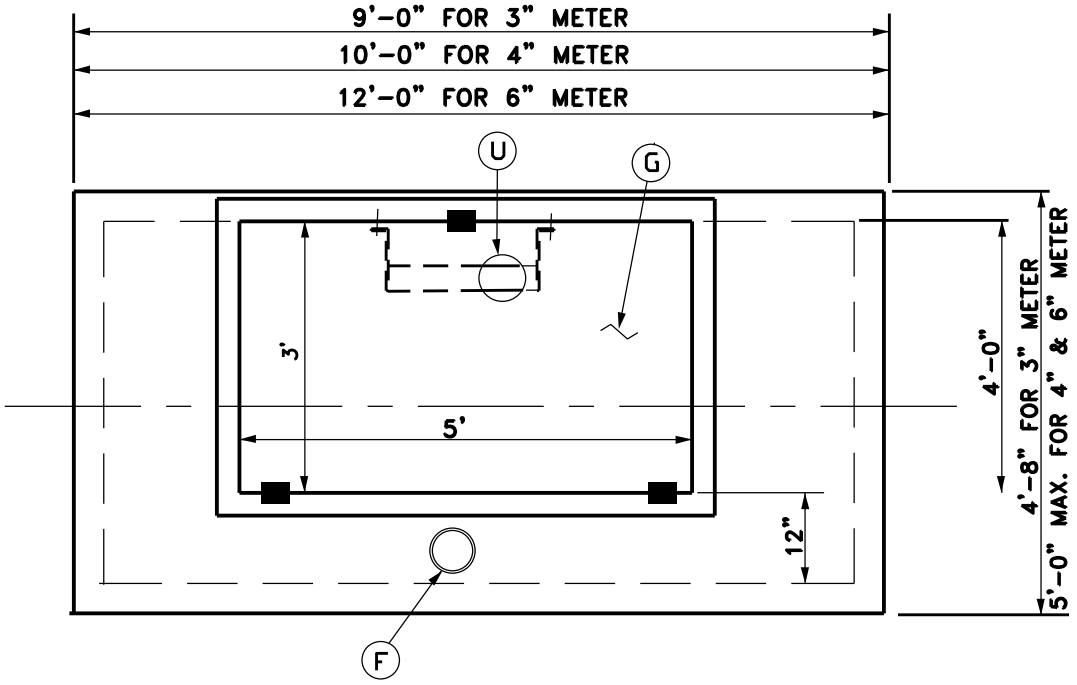


## TOP

| ITEM | DESCRIPTION | QTY. |
|---|---|---|
| A | TEE (3"x3"x2") (4"x4"x2") (6"x6"x3") | 2 EA. |
| B | GATE VALVE WITH WHEEL HANDLE | 2 EA. |
| C | WATER METER | 1 EA. |
| D | 4" x 4" CONCRETE SUPPORT | 7 EA. |
| F | 6" DIAMETER BY 3" DEEP SUMP HOLE | .05 C.F. |
| G | BILCO ACCESS DOOR-3'x5' TYPE Q/ APPROVED EQ. | 1 UNIT |
| K | GATE VALVE & VALVE BOX AT TEE | 1 EA. |
| L | 90° BEND (USE 3"x2" REDUCING BEND) FOR 3" METER | 2 EA. |
| M | GATE VALVE | 1 EA. |
| N | BY-PASS (2"FOR 3" & 4" ASS'Y. 3" FOR 6" ASS'Y. | 2 UNITS |
| P | FLANGE AND PLAIN END PIPE | 1 EA. |
| S | STRAINER | 1 EA. |
| T | 4"x3" REDUCER (3" METER ASSEMBLY ONLY) | 1 EA. |
| U | PERM. ATTACH. ALUM. LADDER (REQ'D. IN VAULT OVER 2' DEEP) | 1 EA. |
| V | FLANGED COUPLING ADAPTER (SMITH BLAIRN (#912) INSTALL MINIMUM OF TWO STAINLESS STEEL ALL THREAD RETAINER RODS WITH FLAT WASHERS AND HEX NUTS (ON EACH END) THROUGH VAULT WALL. RODS TO BE SAME DIAMETER AS FLANGE BOLTS. | 2 EA. |
| X | FLANGED COUPLING ADAPTER | 1 EA. |

3/3

Revision Date:

| | | | |
|---|---|---|---|
| Scale : N/A Date : 06/01/05 | GARLAND ENGINEERING STANDARD DETAILS | TYPICAL METER VAULT FOR 3", 4" & 6" | PAGE 12 |
| Design : | | | |
| Drawn : GAV | | | |
| Dwg. File : SER_007.DWG | | | |
| Project No. : STANDARD-DETAILS | | | |

| I.D. OF MAIN | AIR VALVE | BRASS GATE VALVE | VENT PIPE |
|---|---|---|---|
| 12"-16" | 1" | 1" | 1" |
| 20"-36" | 2" | 2" | 2" |

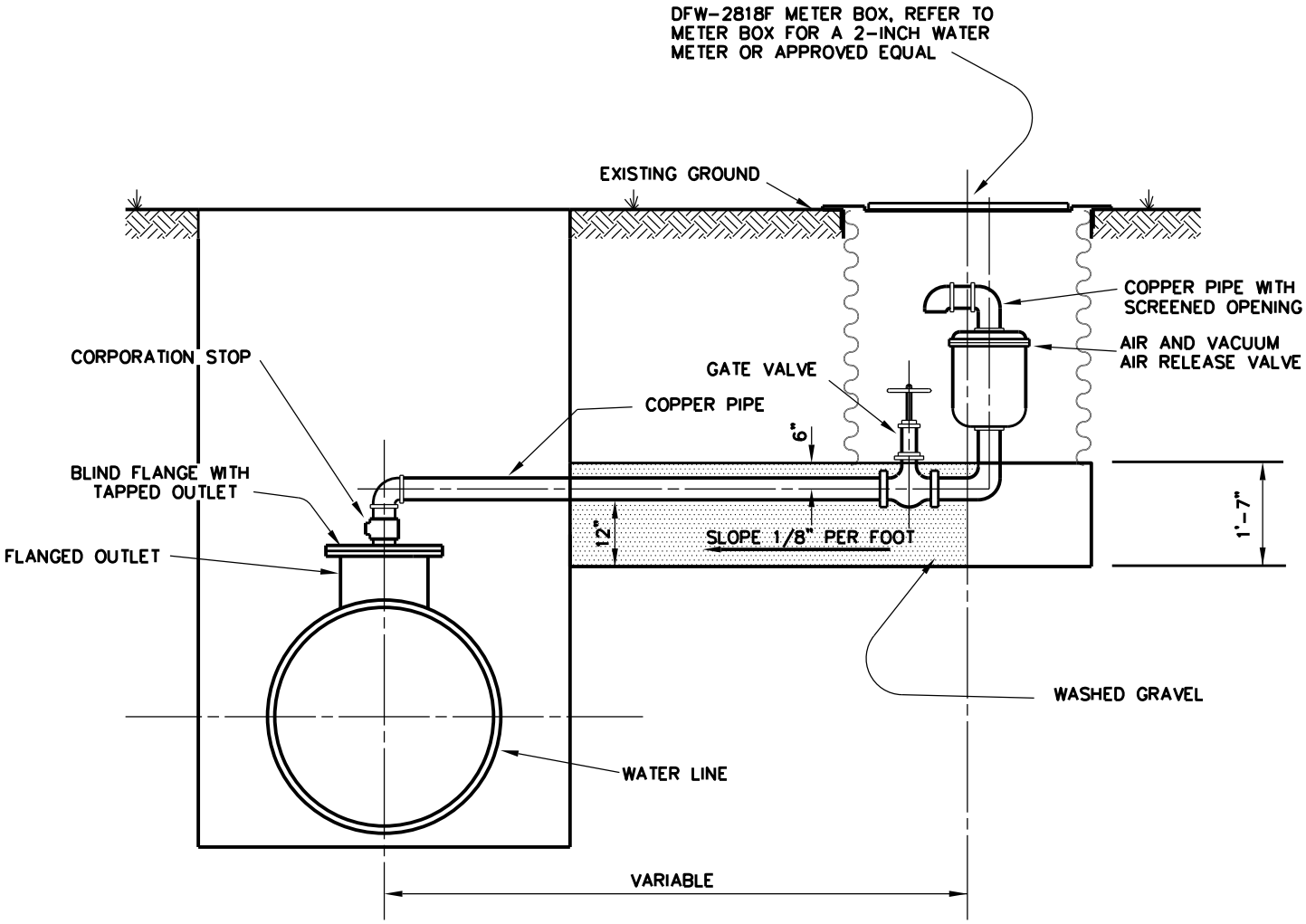


NOTE:
PIPING AND FITTINGS FOR AIR AND VACUUM-AIR RELEASE VALVE SHALL BE 2"ø TYPE "K" COPPER WITH SILVER SOLDER CONNECTIONS

NOTE:
COMBINATION AIR AND VACUUM-AIR RELEASE VALVE APCO OR CLA-VAL OR APPROVED EQUAL.

# TYPICAL AIR AND VACUUM-AIR RELEASE VALVE INSTALLATION

NTS

1/1

Revision Date: 03/14

| | | | |
|---|---|---|---|
| Scale : N/A Date : 06/01/05 | GARLAND ENGINEERING STANDARD DETAILS | AIR AND VACUUM RELEASE VALVE ASSEMBLY | PAGE 13 |
| Design : | | | |
| Drawn : JMK | | | |
| Dwg. File : SER_008.DWG | | | |
| Project No. : STANDARD-DETAILS | | | |

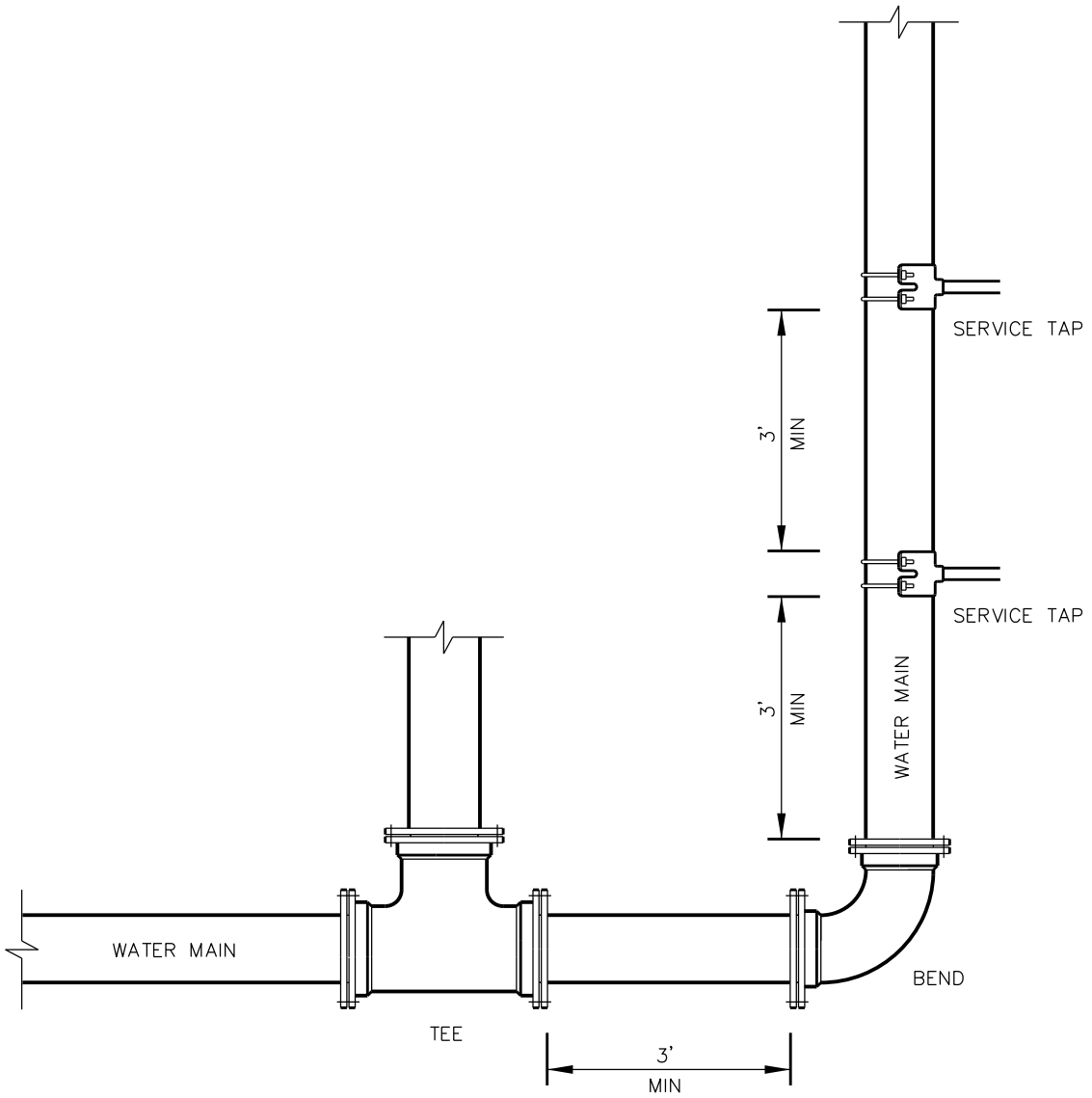


THERE WILL BE A MINIMUM OF 3' CLEAR DISTANCE BETWEEN ANY TAP, BEND OR FITTING ON ANY CITY WATER MAIN.

1/1

Revision Date: 09/06

| | | | |
|---|---|---|---|
| Scale : N/A Date : 07/21/06 | GARLAND ENGINEERING STANDARD DETAILS | TYPICAL SPACING FOR TAPS/FITTINGS | PAGE 14 |
| Design : | | | |
| Drawn : JMK | | | |
| Dwg. File : SER_009.DWG | | | |
| Project No. : STANDARD-DETAILS | | | |

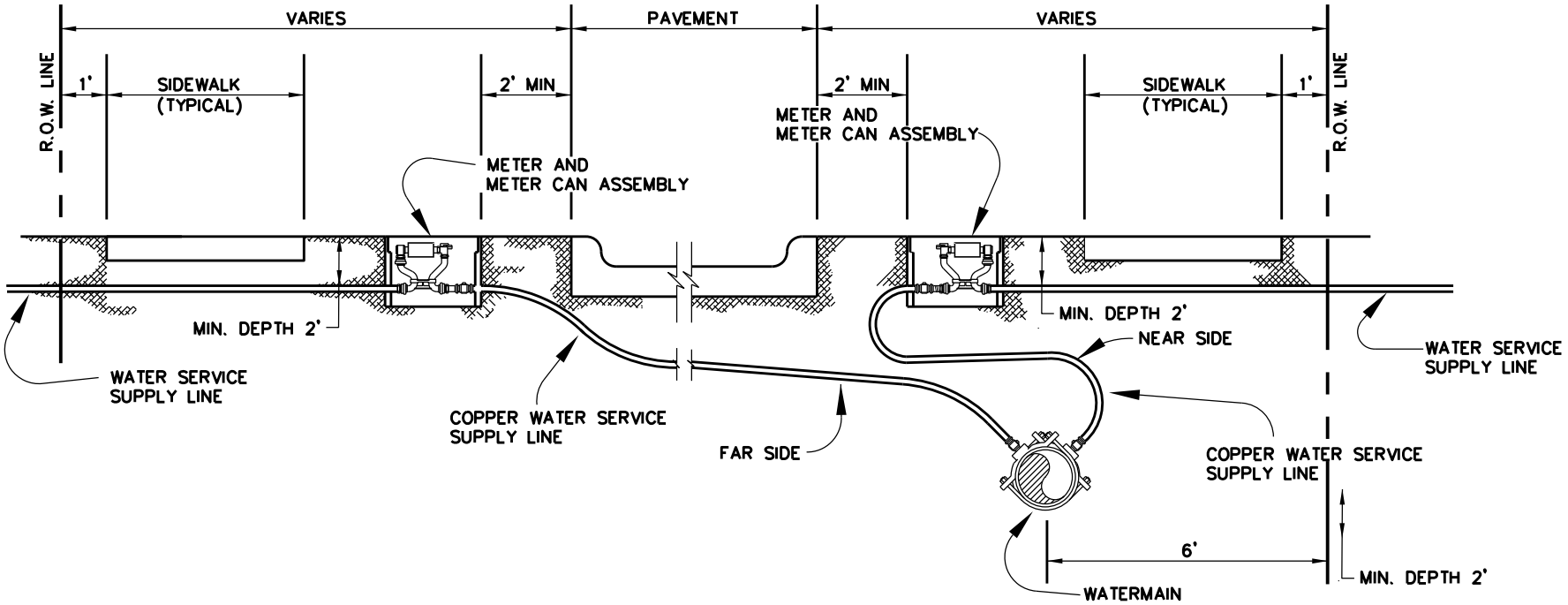


1. REPAIR OF DAMAGED, NEAR SIDE COPPER SERVICE TO CONSIST OF FULL REPLACEMENT FROM WATER MAIN TO WATER METER BOX.
2. REPAIR OF DAMAGED, FAR SIDE COPPER SERVICE TO CONSIST OF REPLACING DAMAGED SECTION WITH NEW COPPER SERVICE LINE COMPLETE WITH GRIP RING TIGHT COMPRESSION COUPLINGS.
3. CITY REPRESENTATIVE MUST BE NOTIFIED IMMEDIATELY UPON DAMAGE.
4. CITY REPRESENTATIVE RESERVES THE RIGHT TO REQUIRE ADDITIONAL MATERIALS AND ADDITIONAL REPLACEMENT IF NECESSARY.
5. MINIMUM COPPER SERVICE DEPTH IS 2'

Revision Date: 12/11

Scale : N/A Date : 06/01/05
Design :
Drawn : JMK
Dwg. File : SER_006A.DWG
Project No. : STANDARD-DETAILS

GARLAND ENGINEERING

STANDARD DETAILS

# WATER SERVICE LINES

# WATER MAIN REPAIR

## 6" TO 12" DIAMETER WATER MAINS

1. USE DUCTILE IRON SLEEVE.
2. CONTRACTOR MUST HAVE MEANS AND METHODS OF REPLACING DAMAGED PIPE.
3. CITY REPRESENTATIVE MUST BE NOTIFIED IMMEDIATELY UPON DAMAGE.
4. REPLACE WITH C-900, DR-18 PVC PIPE SLEEVE.
5. CUT AND REMOVE DAMAGED SECTION.
6. CITY REPRESENTATIVE RESERVES THE RIGHT TO REQUIRE ADDITIONAL MATERIALS AND ADDITIONAL REPLACEMENT, IF NECESSARY.

## 16" AND LARGER DIAMETER WATER MAINS

1. CITY REPRESENTATIVE MUST BE NOTIFIED IMMEDIATELY UPON DAMAGE.
2. ALL REPAIR WORK ON RCCP MATERIAL WILL BE EXECUTED BY A CITY APPROVED CONTRACTOR.
3. ANY RCCP MATERIAL WILL REQUIRE CONSULTATION WITH THE REPRESENTATIVE OF THE CITY OF GARLAND.
4. CITY REPRESENTATIVE RESERVES THE RIGHT TO REQUIRE ADDITIONAL MATERIALS AND ADDITIONAL REPLACEMENT, IF NECESSARY.

1/1

Revision Date: 07/07

| | | | |
|---|---|---|---|
| Scale : N/A Date : 06/01/05 | GARLAND ENGINEERING STANDARD DETAILS | REPAIR OF WATER SERVICE MAINS | PAGE 16 |
| Design : | | | |
| Drawn : JMK | | | |
| Dwg. File : SER_006A.DWG | | | |
| Project No. : STANDARD-DETAILS | | | |

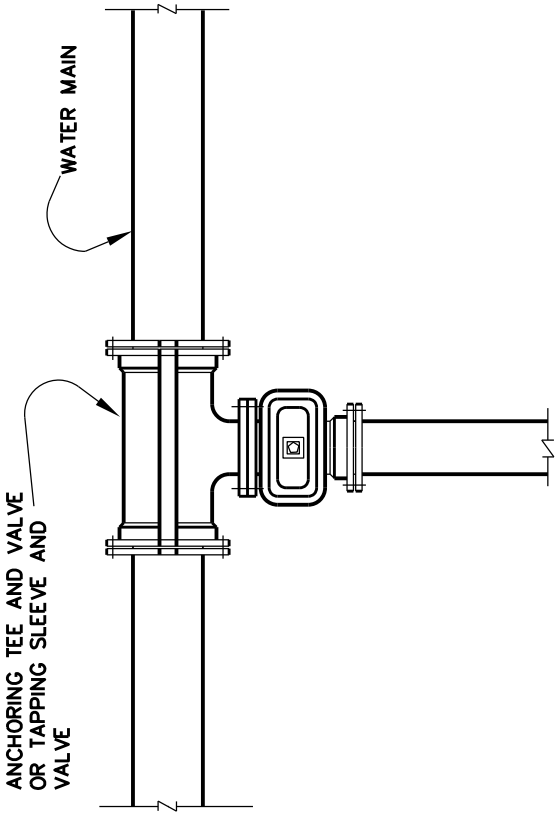


INSTALLATION ONE

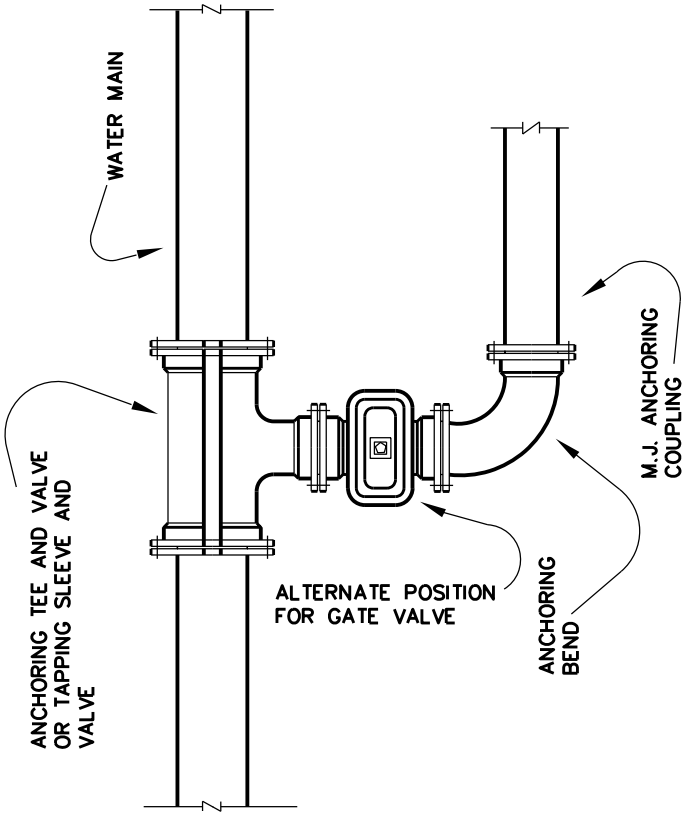


INSTALLATION TWO

1
1

Revision Date: 11/09

| | | | |
|---|---|---|---|
| Scale : N/A Date : 06/01/05 | GARLAND ENGINEERING STANDARD DETAILS | VALVE AND TEE INSTALLATION | PAGE 17 |
| Design : | | | |
| Drawn : JMK | | | |
| Dwg. File : FIR_002.DWG | | | |
| Project No. : STANDARD-DETAILS | | | |

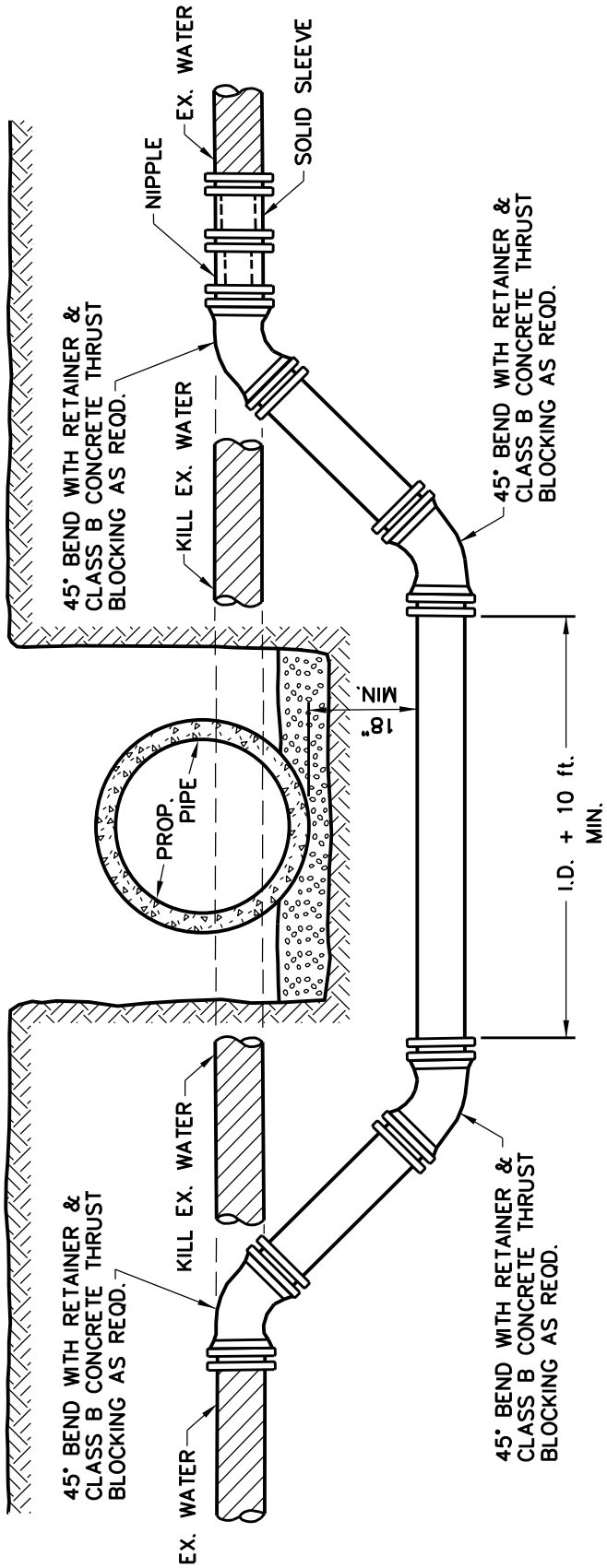


1/1

Revision Date: 12/09

| | | | |
|---|---|---|---|
| Scale : N/A Date : 02/24/06 | GARLAND ENGINEERING STANDARD DETAILS | STANDARD WATER MAIN LOWERING | PAGE 18 |
| Design : | | | |
| Drawn : GAV | | | |
| Dwg. File : WATLOW_001.DWG | | | |
| Project No. : STANDARD-DETAILS | | | |