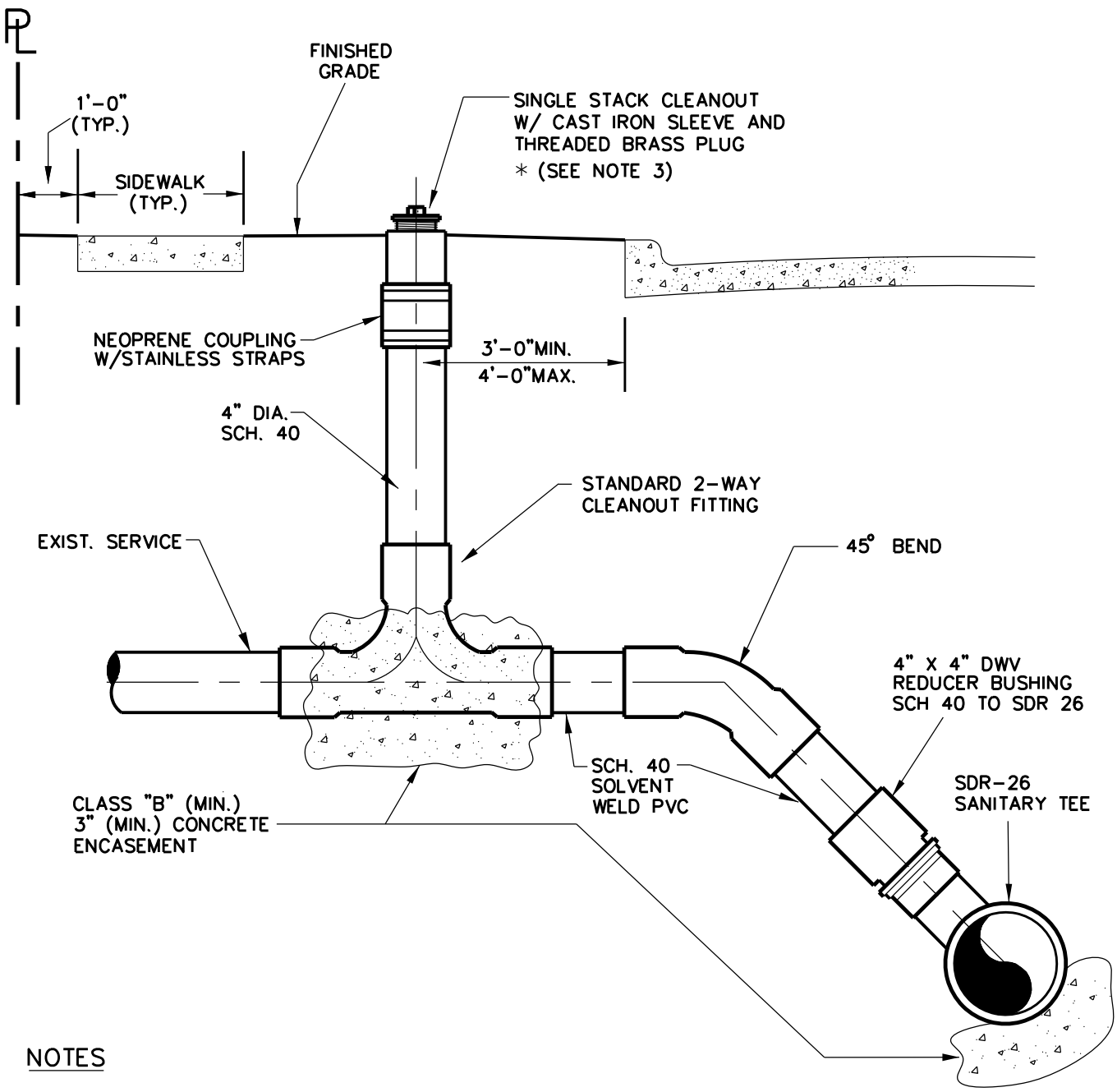

NOTES

1. ALL PIPE TO BE 4" DIA. SCHEDULE 40 SOLVENT WELD PVC, EXCEPT SERVICE PIPE AT MAIN LINE TEE.
2. USE NEOPRENE COUPLING W/STAINLESS STRAPS AT CONNECTION WITH EXISTING SERVICE.

* 3. IN PAVEMENT USE A CLEAN OUT FRAME & COVER.

1/1

Revision Date: 12/11

Scale : N/A Date : 06/01/05	GARLAND ENGINEERING STANDARD DETAILS	TYPICAL WASTEWATER SINGLE STACK 2-WAY CLEANOUT FOR EXISTING SERVICE CONNECTION	PAGE 1
Design : COG			
Drawn : JMK			
Dwg. File : CLN_001.DWG			
Project No. : STANDARD-DETAILS			

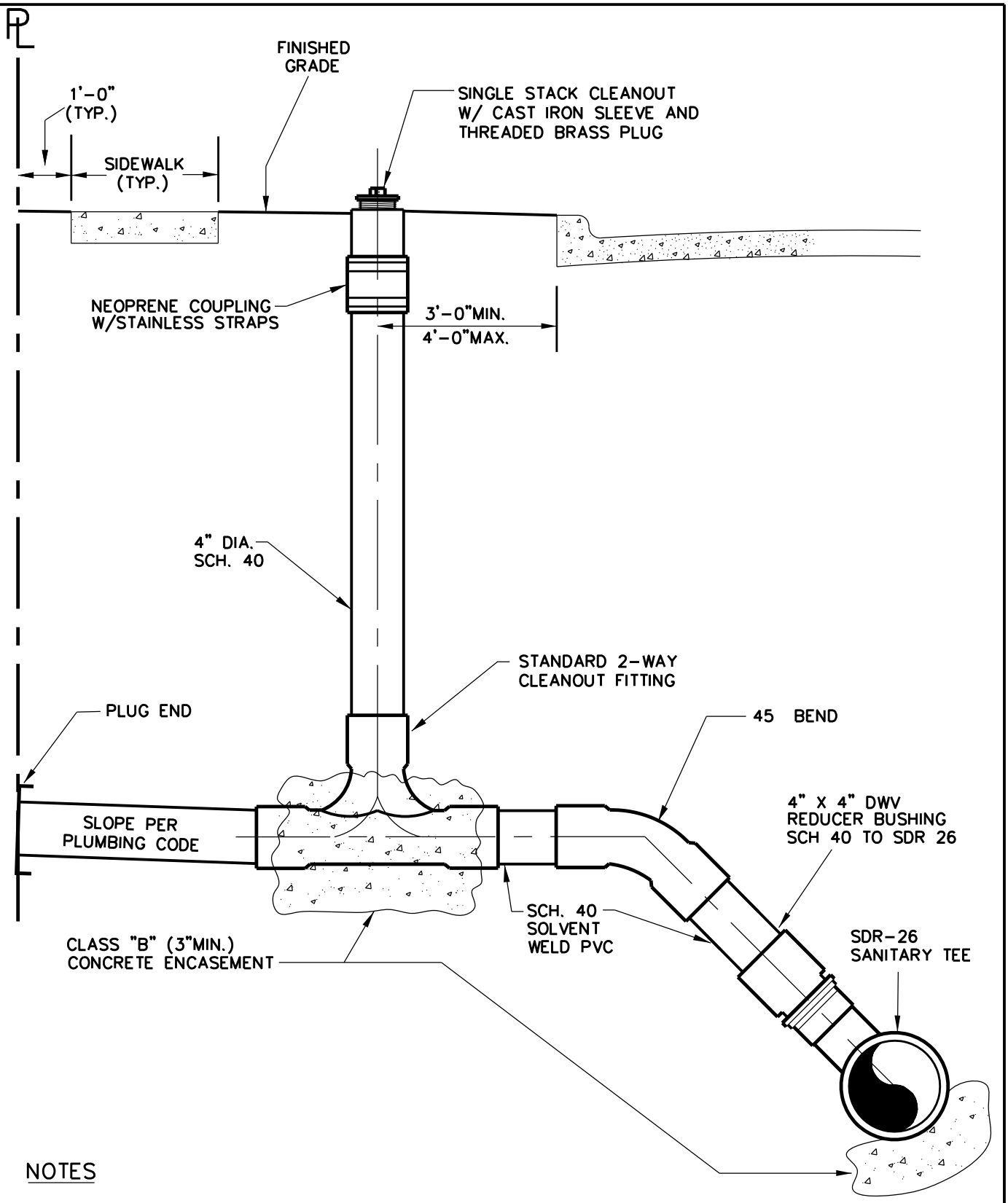

NOTES

1. ALL PIPE TO BE 4" DIA. SCHEDULE 40 SOLVENT WELD PVC, EXCEPT SERVICE PIPE AT MAIN LINE TEE.

1/1

Revision Date: 12/11

Scale : N/A Date : 06/01/05	GARLAND ENGINEERING STANDARD DETAILS	TYPICAL WASTEWATER SINGLE STACK 2-WAY CLEANOUT FOR NEW SERVICE CONNECTION	PAGE 2
Design : COG			
Drawn : JMK			
Dwg. File : CLN_001.DWG			
Project No. : STANDARD-DETAILS			

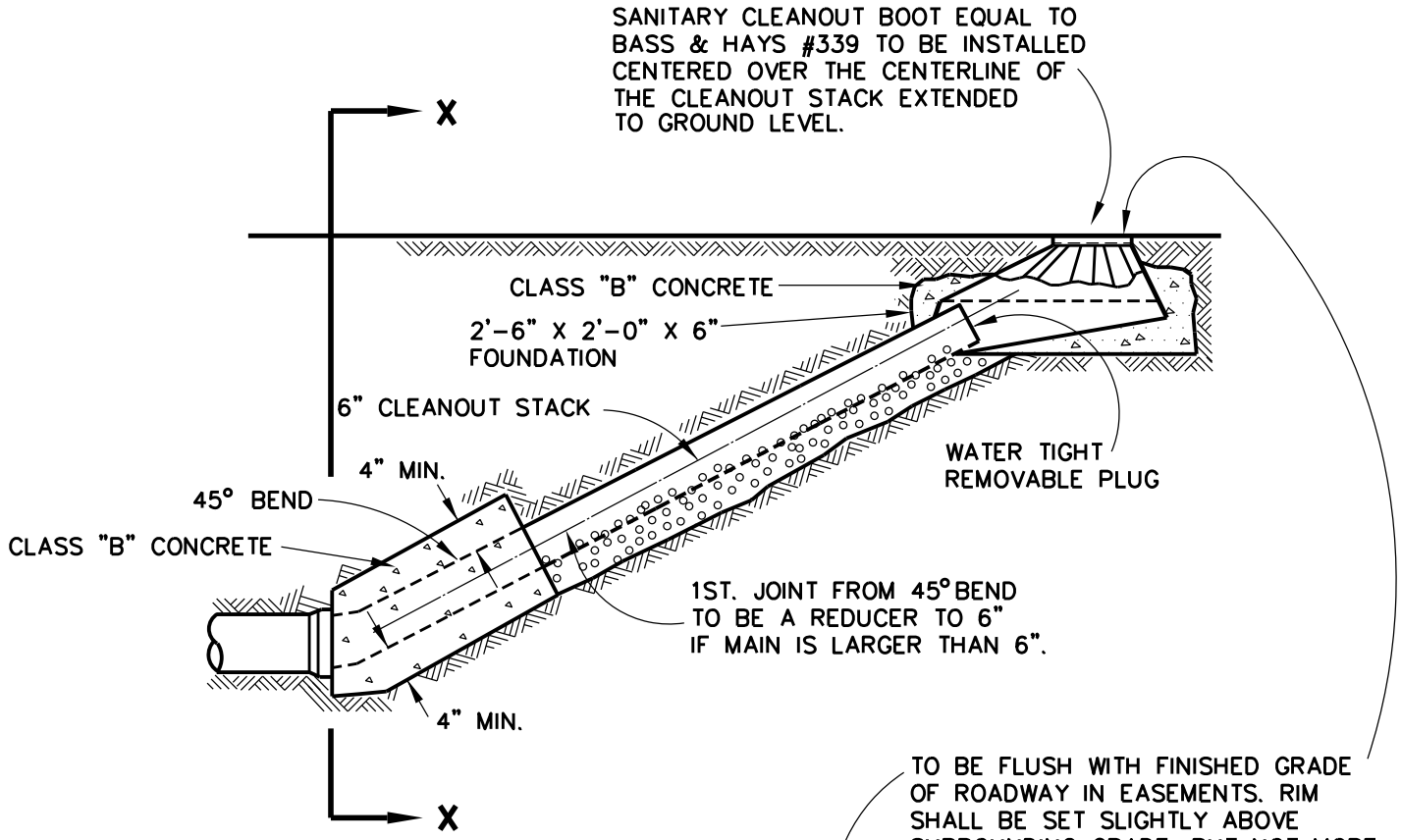

PROFILE VIEW

N.T.S.

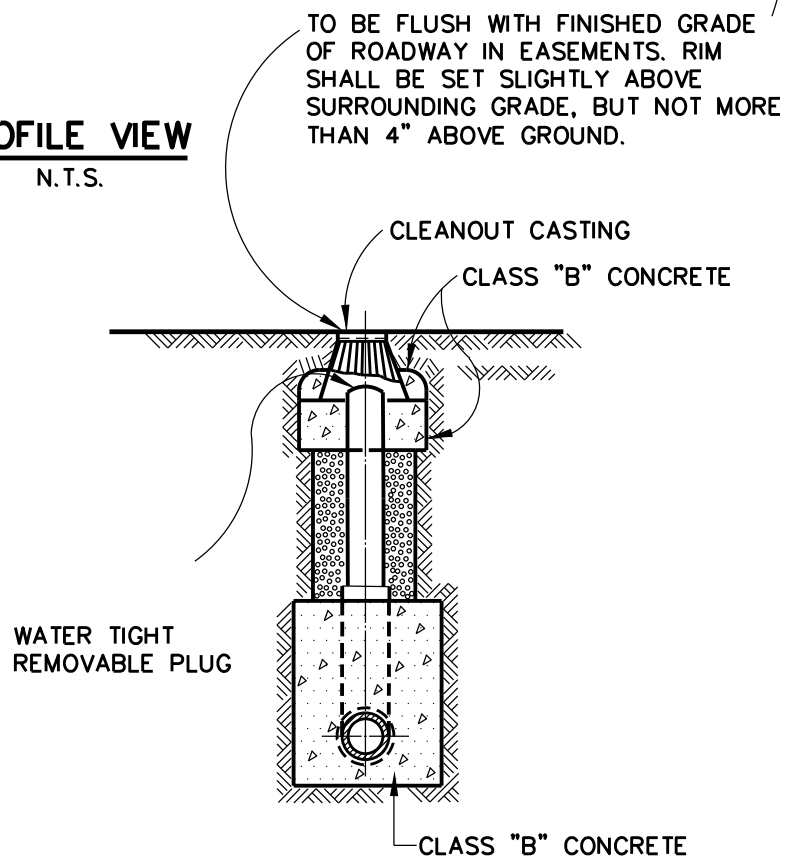

ELEVATION "X – X"

N.T.S.

NOTE:
IF CLEANOUT IS PLACED IN ADVANCE OF PAVEMENT PLACE SAND AROUND CLEANOUT CASTING IN LIEU OF CONCRETE.

1/1

Revision Date:

Scale : N/A Date : 06/01/05	GARLAND ENGINEERING STANDARD DETAILS	WASTEWATER MAIN LINE DEADEND CLEANOUT	PAGE 3
Design :			
Drawn : JMK			
Dwg. File : CLN_002.DWG			
Project No. : STANDARD-DETAILS			

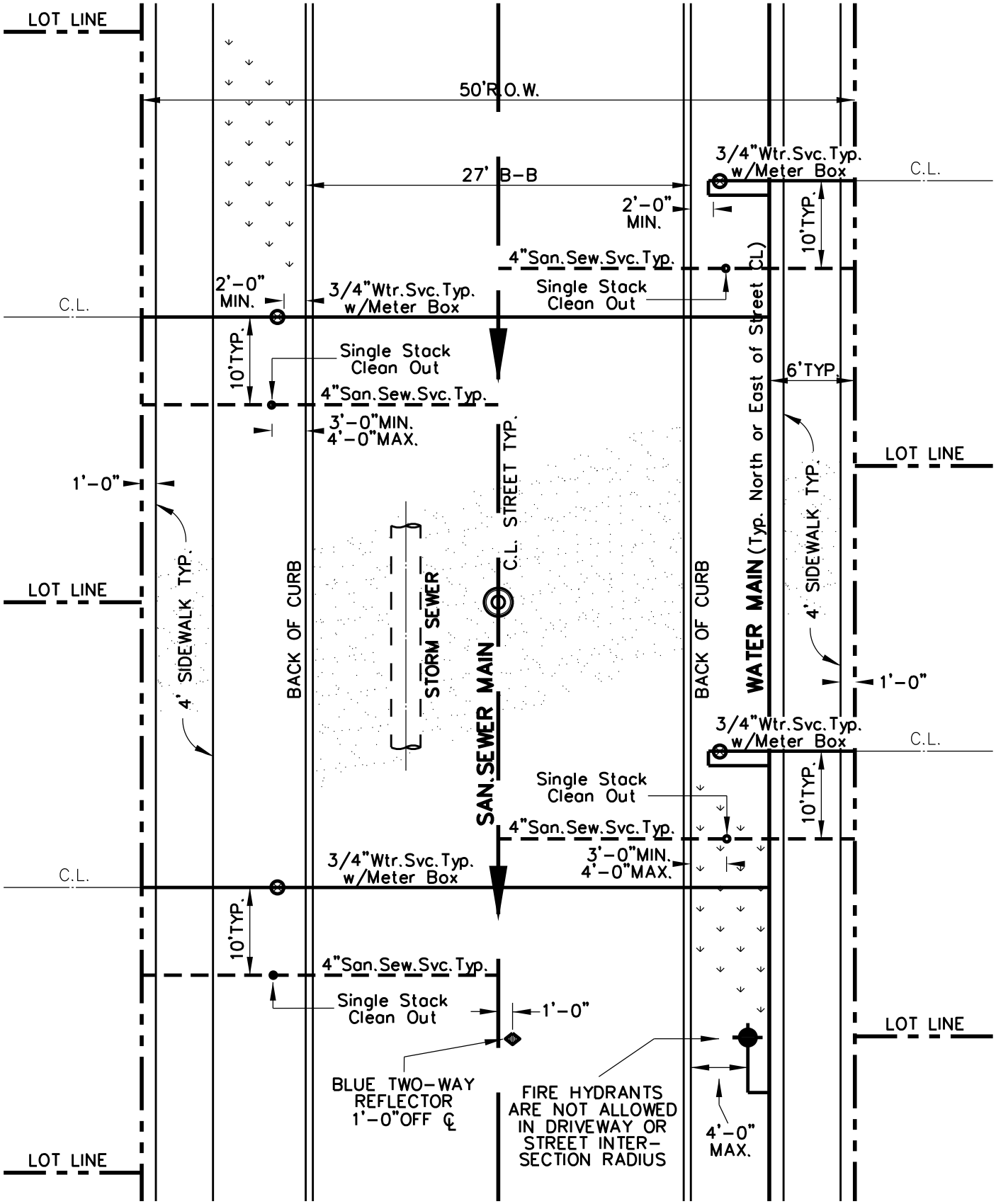

NOTE:
METERS AND FIRE HYDRANTS ARE NOT ALLOWED IN CONCRETE PAVEMENT.

1/1

Revision Date: 12/06

Scale : N/A Date : 02/24/06	GARLAND ENGINEERING STANDARD DETAILS	TYPICAL RESIDENTIAL WATER & SAN. SEWER CONNECTION DETAIL	PAGE 4
Design :			
Drawn : JMK			
Dwg. File : CLN_003.DWG			
Project No. : STANDARD-DETAILS			

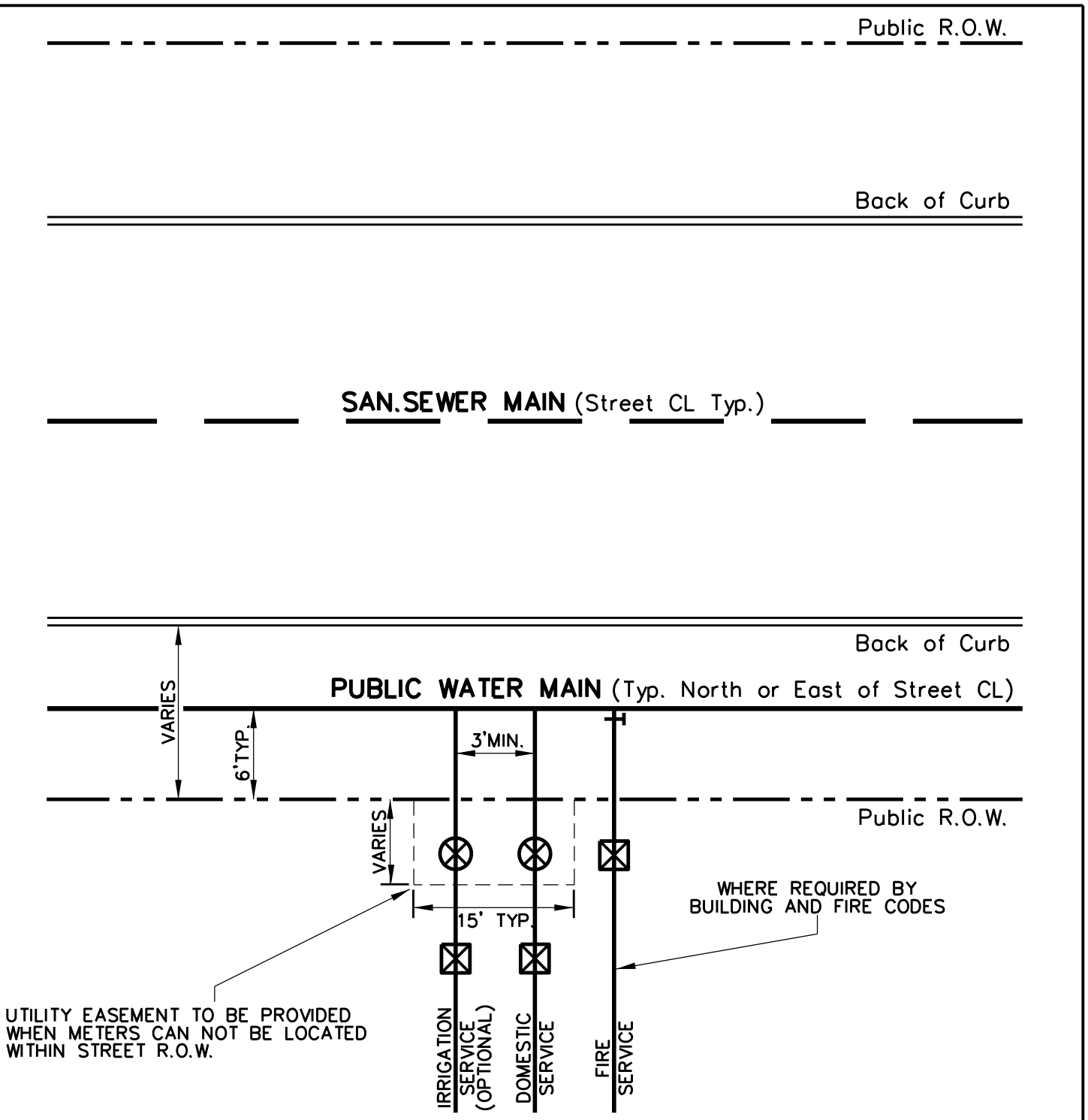

NOTE:

APPROVED DOUBLE CHECK ASSEMBLY REQUIRED ON ALL SETUPS TO MEET CITY OF GARLAND BACKFLOW REQUIREMENTS.

PURSUANT TO THE CITY OF GARLAND CODE OF ORDINANCES, ARTICLE V, SECTION 51.72 (A)(1), CROSS CONNECTION CONTROL; "A BACKFLOW PREVENTION ASSEMBLY SHALL BE TESTED IMMEDIATELY AFTER INSTALLATION." TEST RESULTS MUST BE SUBMITTED TO WATER SYSTEM ANALYST WITHIN 48 HOURS OF INSTALLATION OF DEVICE. FOR A LIST OF REGISTERED TESTER IN THE CITY OF GARLAND, CALL WATER SYSTEM ANALYST @ 972 205-3214.

1/1

Revision Date:

Scale : N/A Date : 02/24/06	GARLAND ENGINEERING STANDARD DETAILS	NON-RESIDENTIAL WATER SERVICE CONNECTION DETAIL	PAGE 5
Design :			
Drawn : JMK			
Dwg. File : CLN_004.DWG			
Project No. : STANDARD-DETAILS			

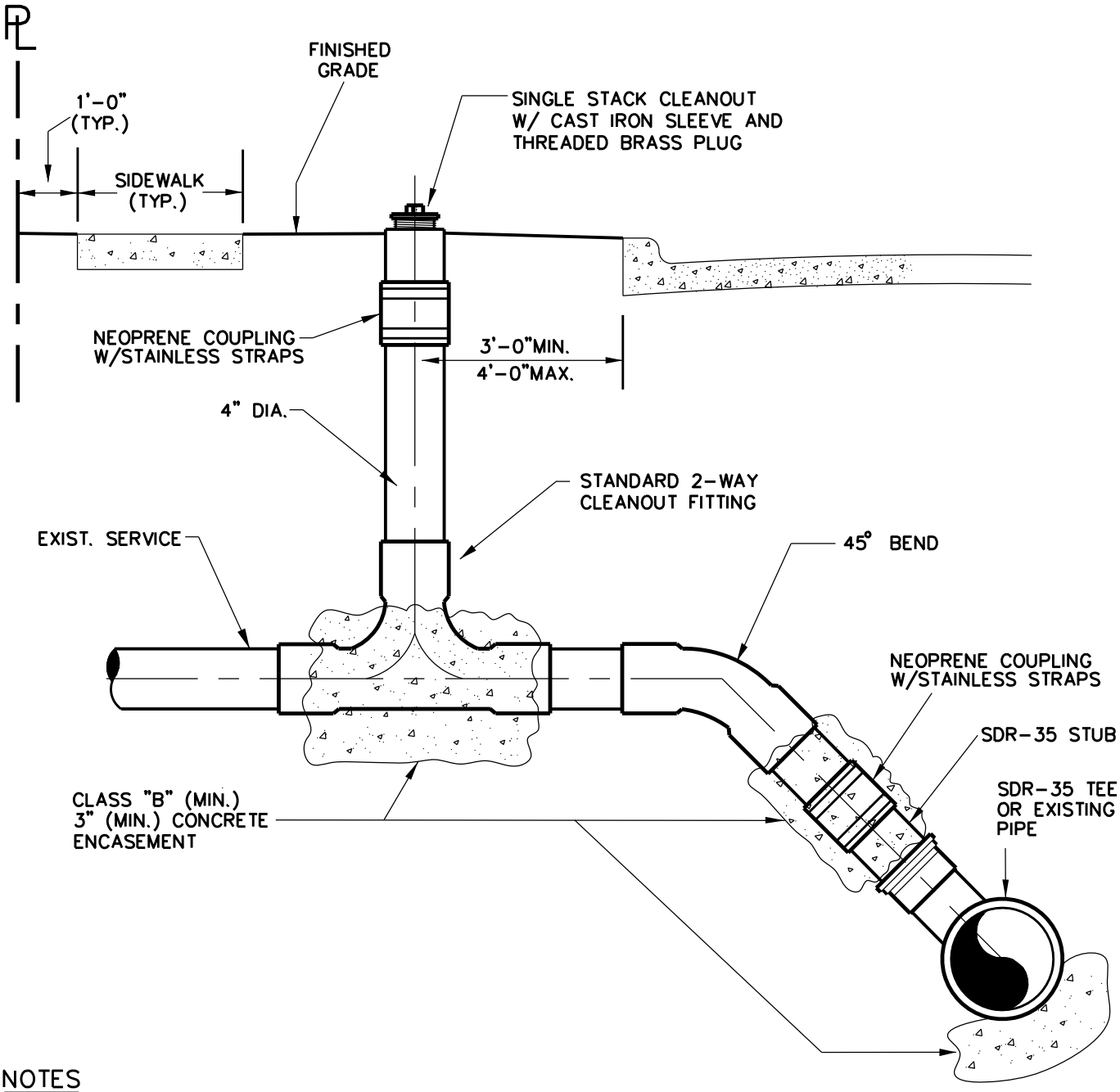

NOTES

1. CITY REPRESENTATIVE MUST BE NOTIFIED IMMEDIATELY UPON DAMAGE.
2. REPAIR OF DAMAGED WASTEWATER SERVICE SHALL CONSIST OF REPLACING THE DAMAGED SECTION WITH SCHEDULE 40 PVC PIPE MATERIAL.
3. SHOULD DAMAGED SERVICE NOT HAVE AN EXISTING CLEANOUT, SERVICE SHALL BE REPLACED TO THE PROPERTY LINE AND A NEW SINGLE STACK, TWO WAY CLEANOUT INSTALLED ON THE CITY SIDE OF THE PROPERY LINE.
4. WHERE THE CLEANOUT TO BE REPLACED OR INSTALLED IS LOCATED IN CONCRETE, A BASS & HAYS #404 CLEANOUT, OR EQUAL, SHALL BE USED AND THE TOP SHALL BE FLUSH WITH CONCRETE SURFACE.
5. CITY REPRESENTATIVE RESERVES THE RIGHT TO REQUIRE ADDITIONAL MATERIALS AND ADDITIONAL REPLACEMENT IF NECESSARY.

1/1

Revision Date: 12/11

Scale : N/A Date : 06/01/05	GARLAND ENGINEERING STANDARD DETAILS	REPAIR OF EXISTING WASTEWATER SERVICE CONNECTION	PAGE 6
Design :			
Drawn : JMK			
Dwg. File : CLN_001A.DWG			
Project No. : STANDARD-DETAILS			

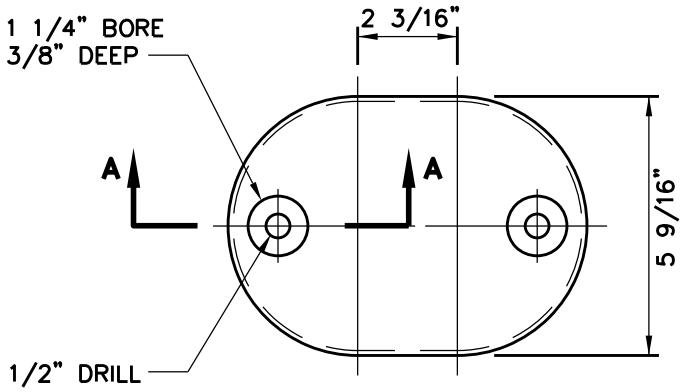

COVER
N.T.S.

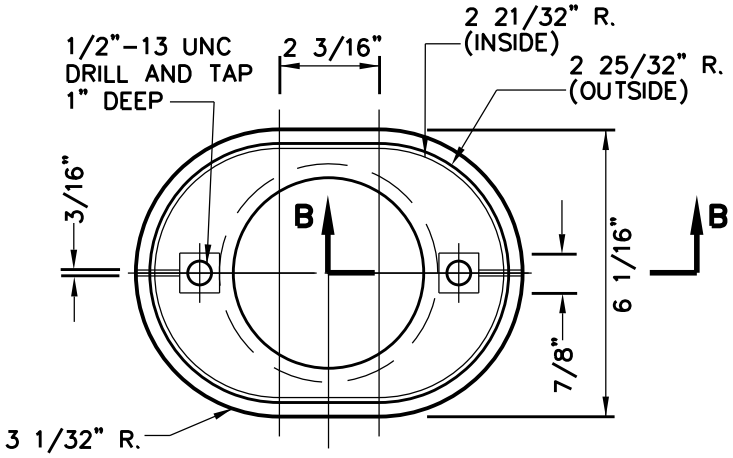

CLEANOUT FRAME TOP
N.T.S.

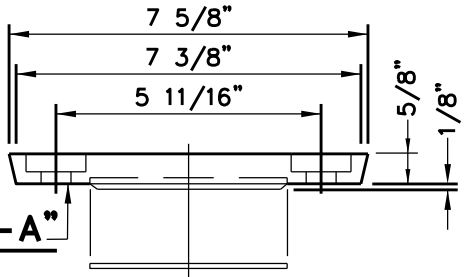

SECTION "A-A"
N.T.S.

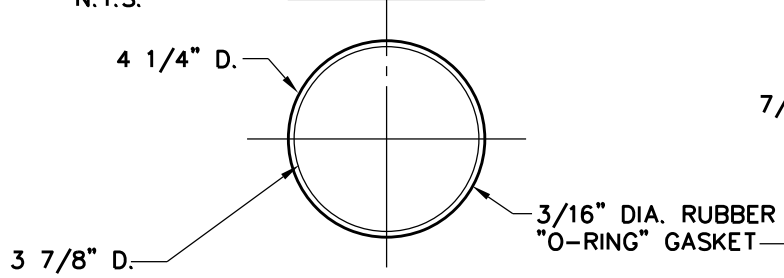

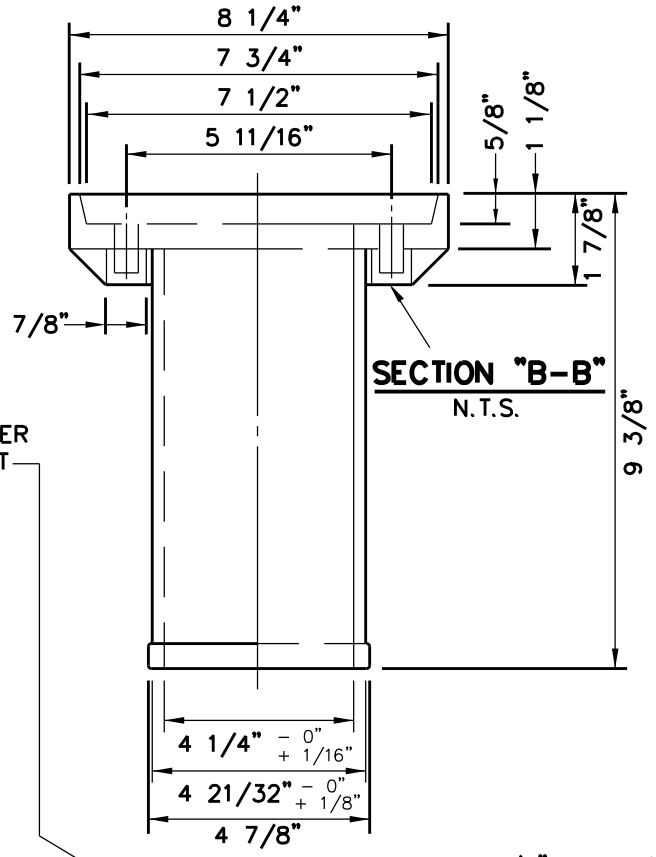

SECTION "B-B"
N.T.S.

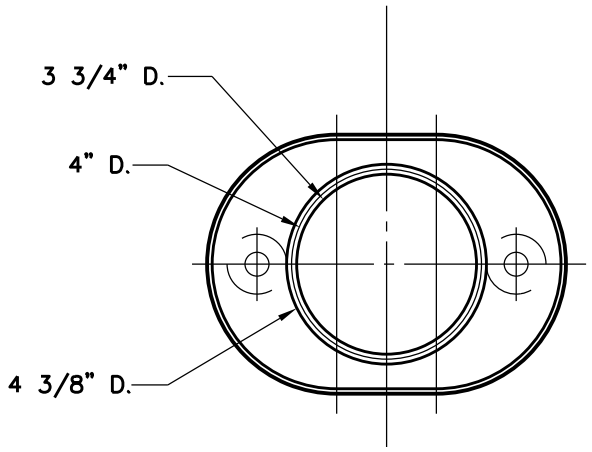

CLEANOUT FRAME BOTTOM
N.T.S.

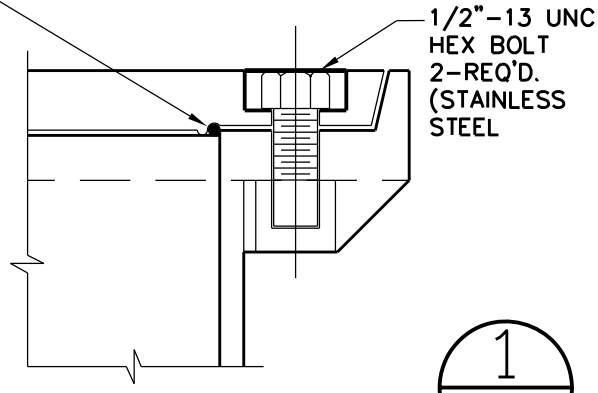

ASSEMBLY VIEW
N.T.S.

NOTES:

1. THE WORDS "WASTEWATER LATERAL CLEANOUT" SHALL BE CAST INTO TOP OF COVER.
2. MATERIALS TO BE CAST IRON, P.V.C. OR ABS PLASTIC.

1/1

Revision Date:			
Scale : N/A Date :12/01/11	GARLAND ENGINEERING STANDARD DETAILS	CLEANOUT FRAME & COVER WASTEWATER LATERAL	PAGE 7
Design :			
Drawn : JMK			
Dwg. File : REV5140			
Project No. : STANDARD-DETAILS			