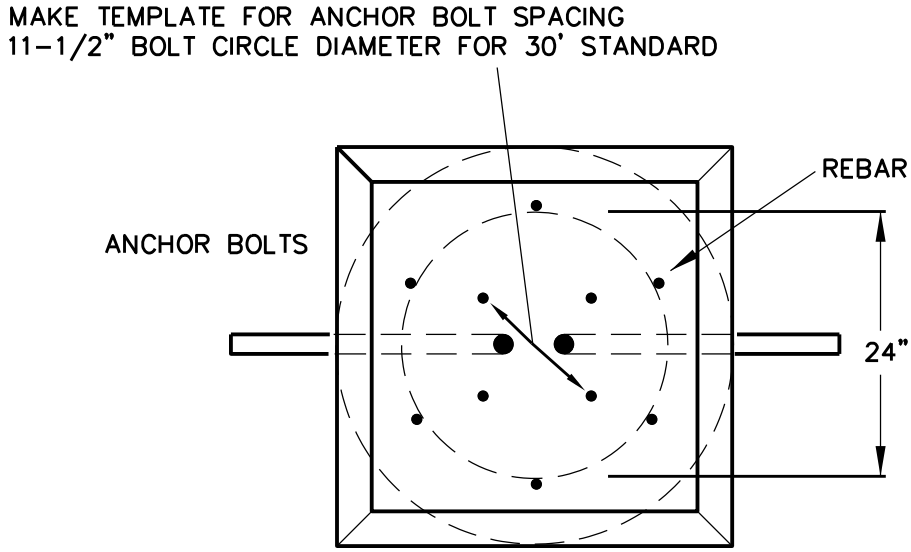

TOP VIEW

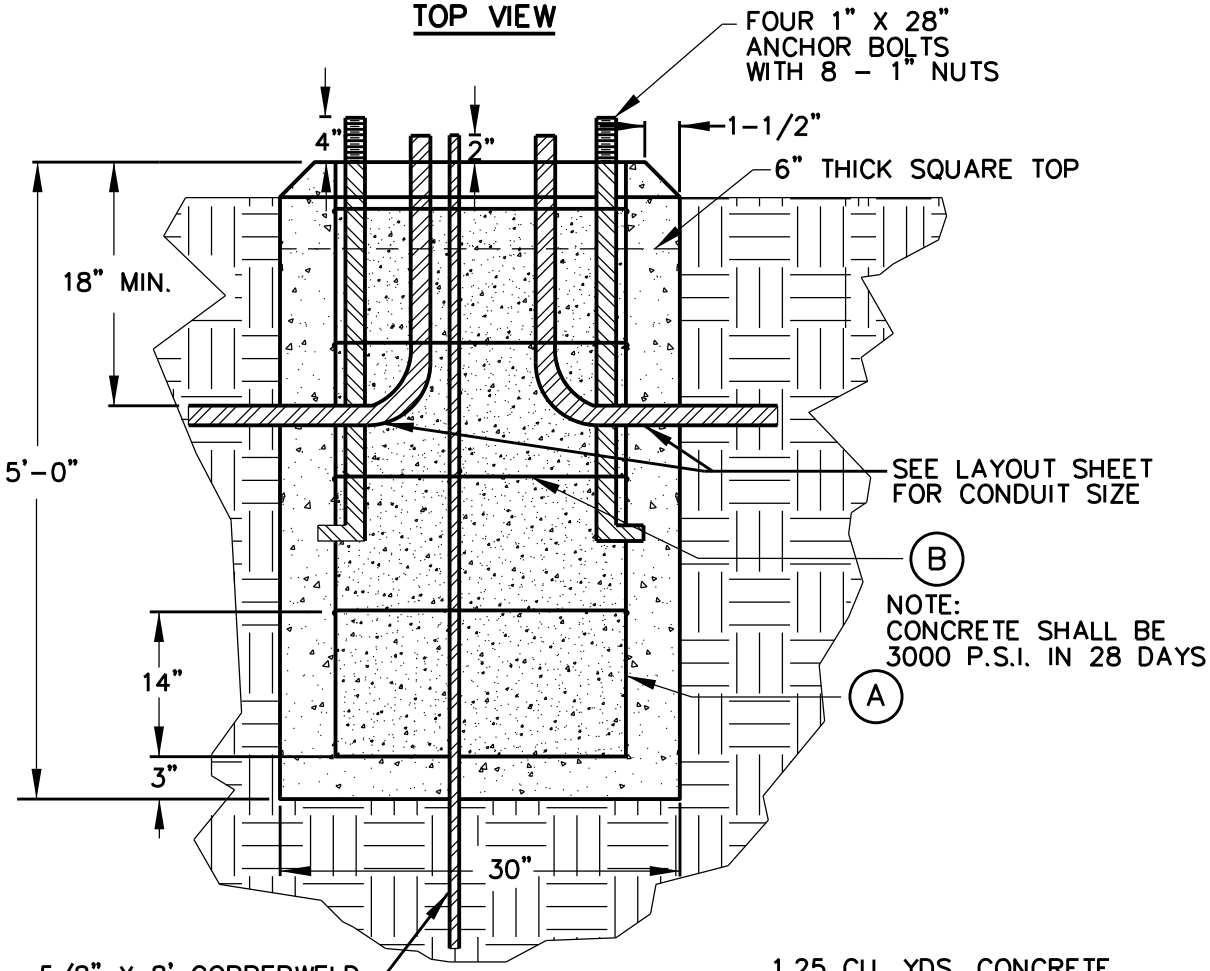

ELEVATION

1.25 CU. YDS. CONCRETE

ITEM	LENGTH	QTY REQ.	REBAR SIZE
A	4' - 6"	6	#5
B	24" DIA. LOOP	5	#3

1/1

Revision Date:

Scale : N/A Date : 02/24/06	GARLAND ENGINEERING STANDARD DETAILS	STREET LIGHT BASE FOR 30' STANDARD
Design :		
Drawn : JC		
Dwg. File : STLGHTBASE		
Project No. : STANDARD-DETAILS		

PAGE 1

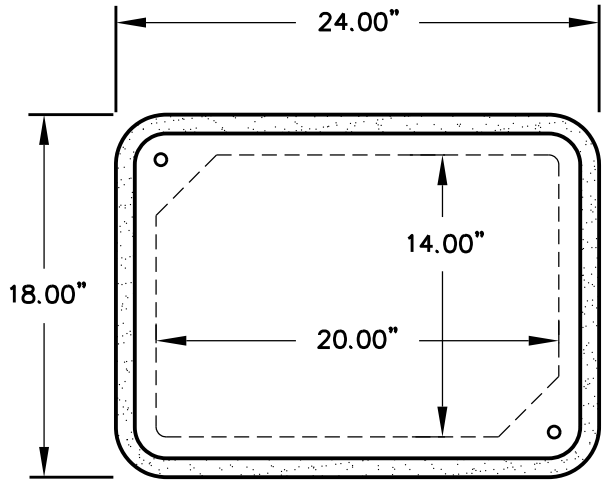

PEDESTAL TOP VIEW
W/ OUT COVER

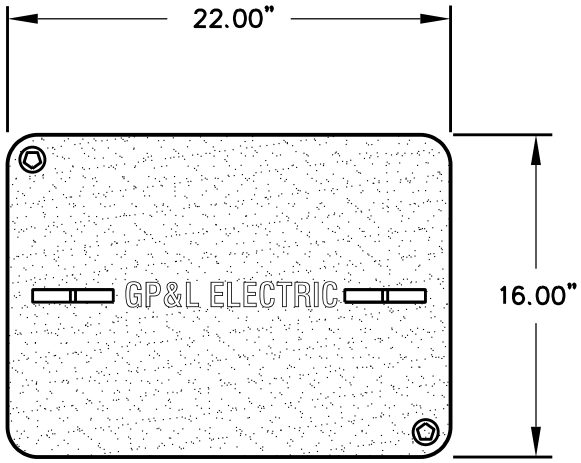

PEDESTAL COVER

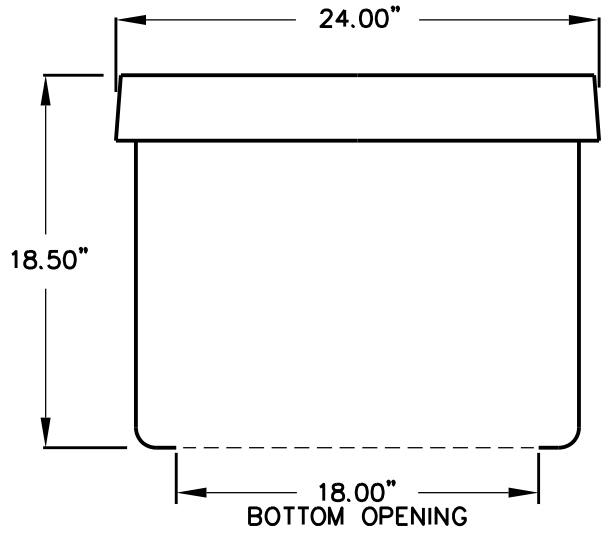

FRONT VIEW

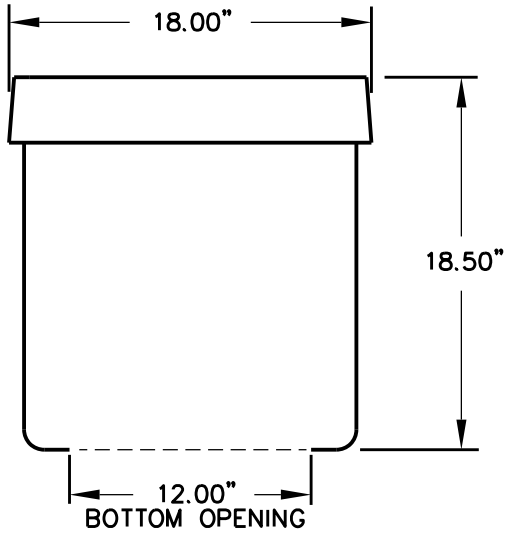

SIDE VIEW

1
1

Revision Date:			
Scale : N/A Date : 02/24/06	GARLAND ENGINEERING STANDARD DETAILS	POWER PEDESTAL (SUBSURFACE BOX WITH COVER)	PAGE 2
Design :			
Drawn : JC			
Dwg. File : PWRPEDESTAL			
Project No. : STANDARD-DETAILS			

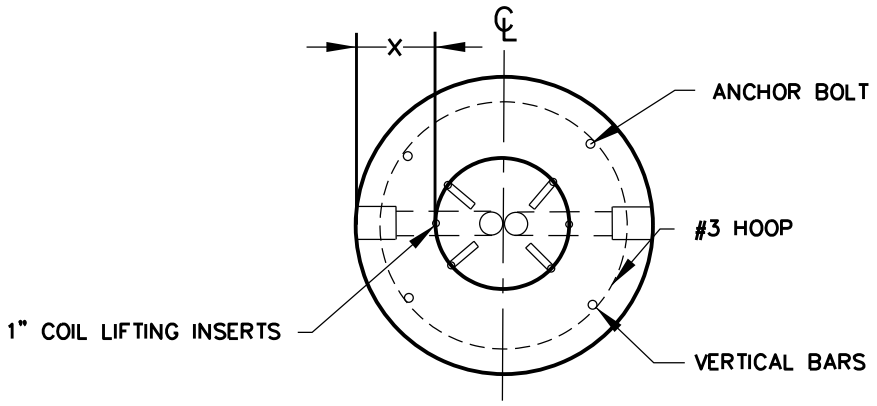

TOP VIEW

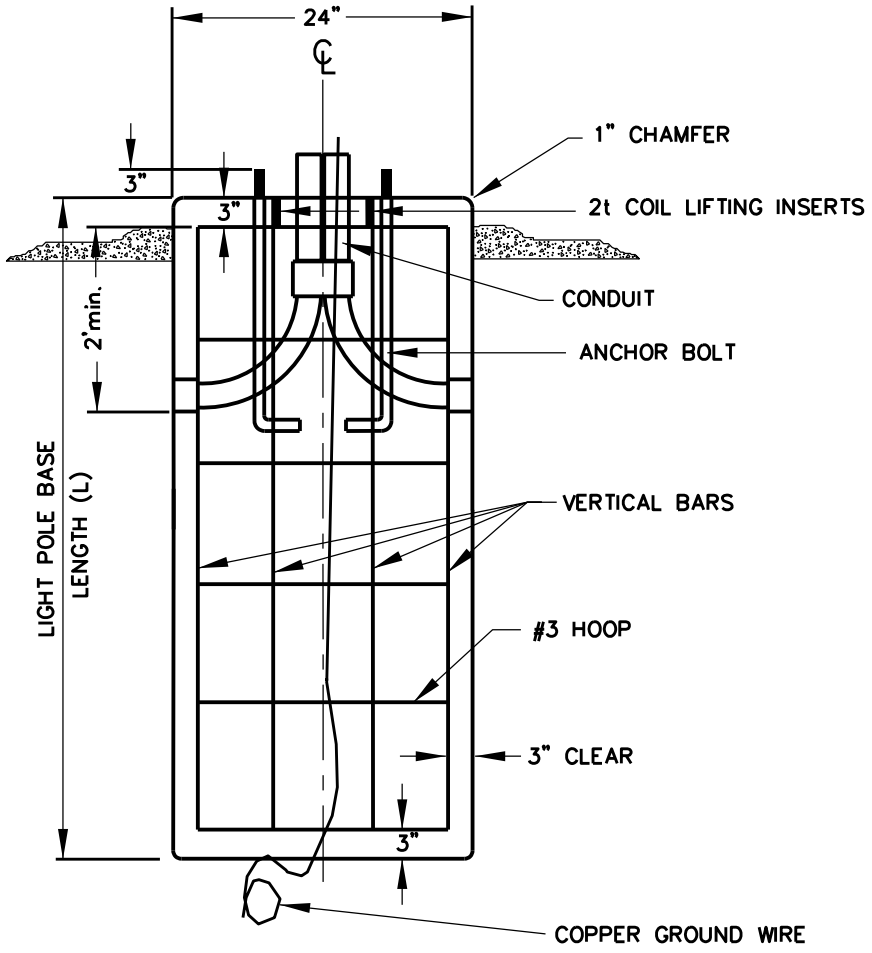

ELEVATION

1/1

Revision Date:

Scale : N/A Date : 02/24/06	GARLAND ENGINEERING STANDARD DETAILS	MEDIAN STREET LIGHT BASE (PRECAST)
Design :		
Drawn : GL		
Dwg. File : ST LGHT BASE (PRECAST)		
Project No. : STANDARD-DETAILS		

PAGE 3

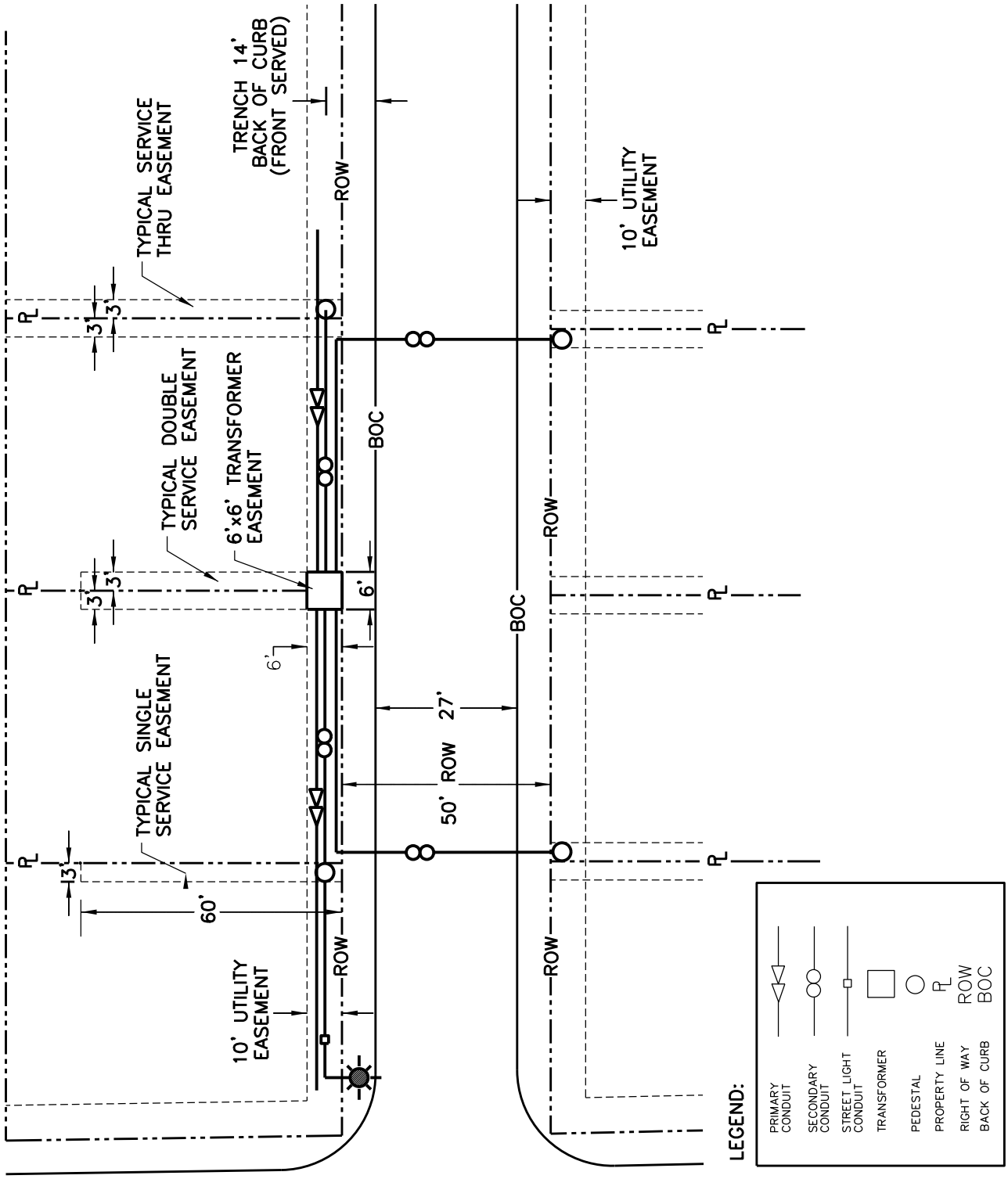

1/8

Revision Date:			
Scale : N/A Date : 03/16/06	GARLAND ENGINEERING STANDARD DETAILS	TYP. RESIDENTIAL TRANSFORMER PRIMARY & SECONDARY LAYOUT FRONT SERVICE	PAGE 4
Design :			
Drawn : JC			
Dwg. File : FRONT_SVC.DWG			
Project No. : STANDARD-DETAILS			

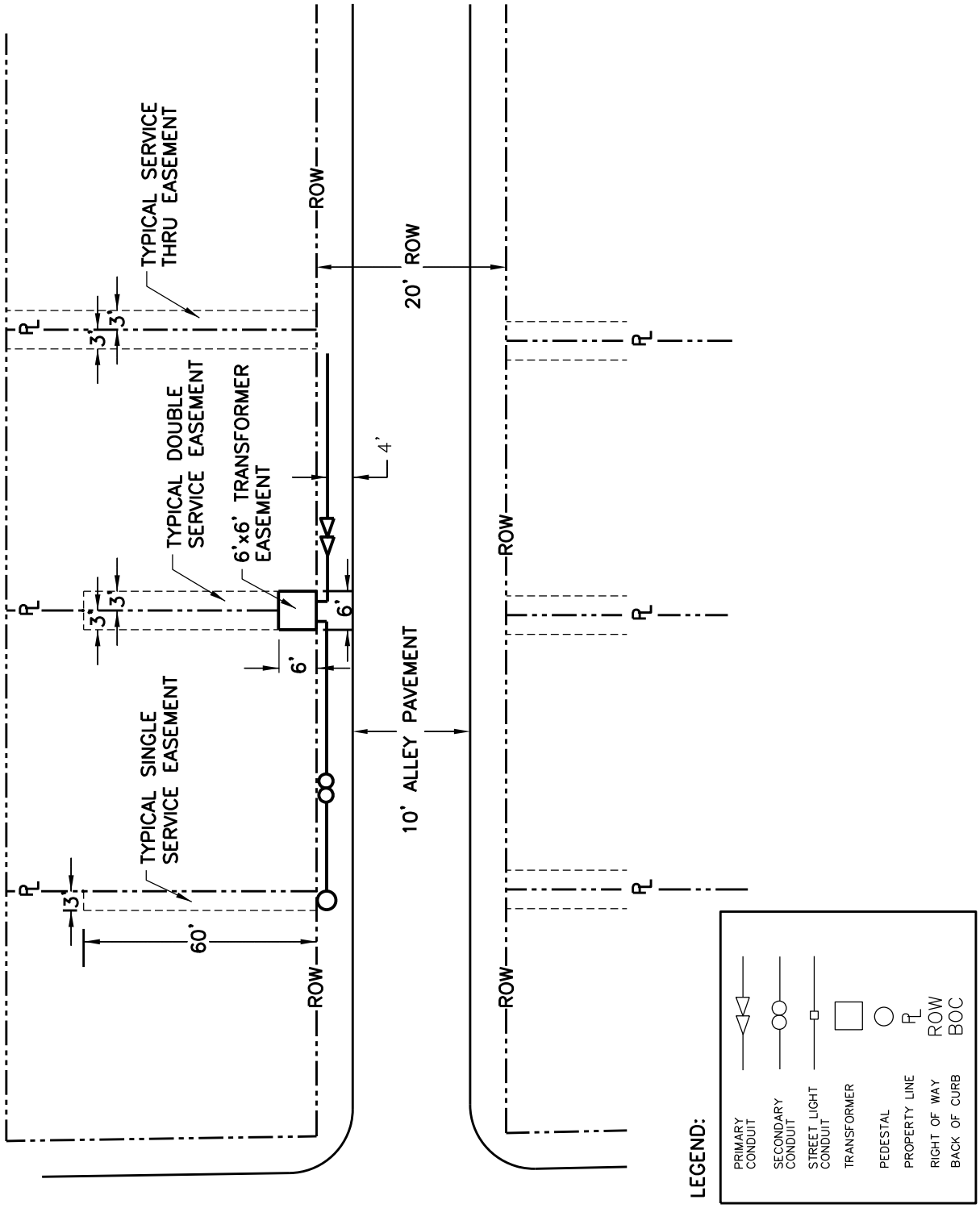

2/8

Revision Date:

Scale : N/A Date : 03/16/06	GARLAND ENGINEERING STANDARD DETAILS	TYP. RESIDENTIAL TRANSFORMER PRIMARY & SECONDARY LAYOUT ALLEY SERVICE	PAGE 5
Design :			
Drawn : JC			
Dwg. File : ALLEY_SVC.DWG			
Project No. : STANDARD-DETAILS			

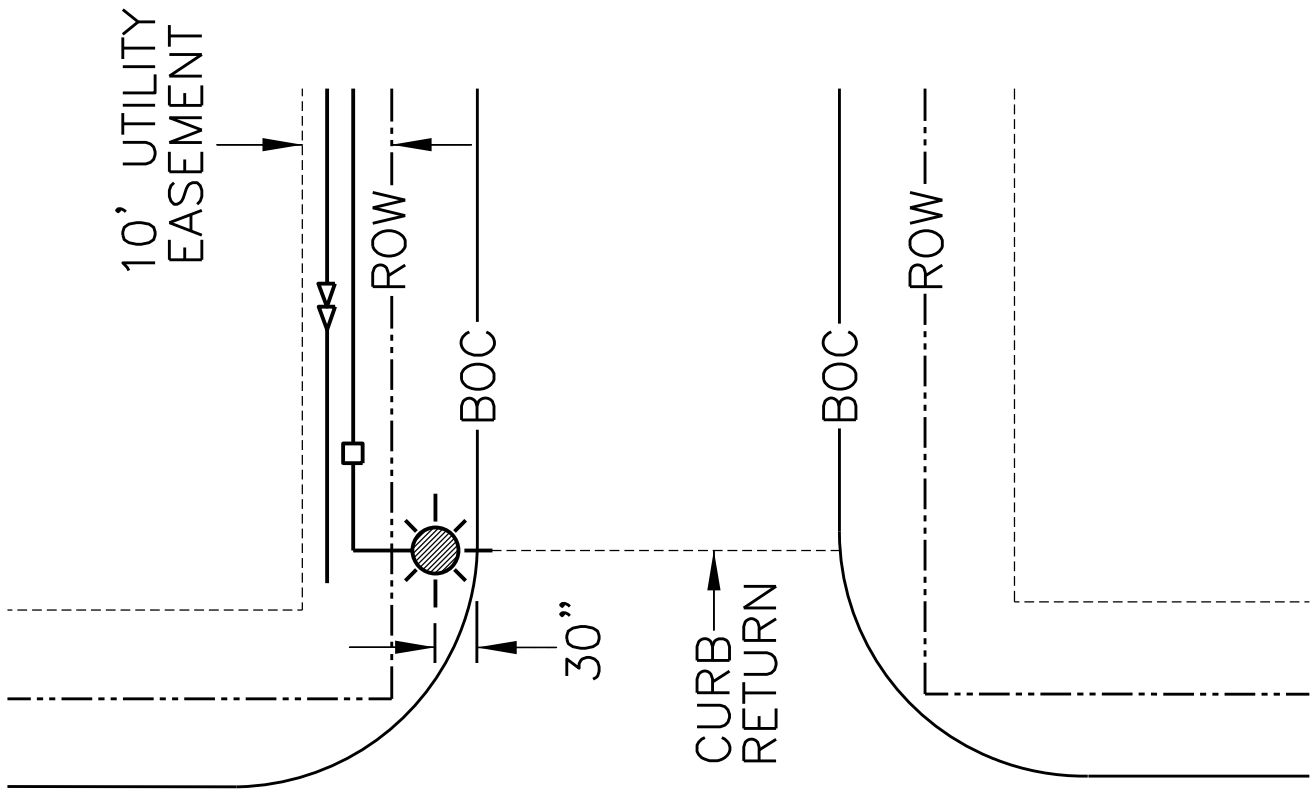

LEGEND:

- PRIMARY CONDUIT
- SECONDARY CONDUIT
- STREET LIGHT CONDUIT
- TRANSFORMER
- PEDESTAL
- PROPERTY LINE — PL
- RIGHT OF WAY — ROW
- BACK OF CURB — BOC

3/8

Revision Date:

Scale : N/A	Date : 03/16/06	GARLAND ENGINEERING STANDARD DETAILS	TYPICAL STREET LIGHT LOCATION
Design :			
Drawn : JC			
Dwg. File : ST_LIGHT_LOC.DWG			
Project No. : STANDARD-DETAILS			

PAGE 6

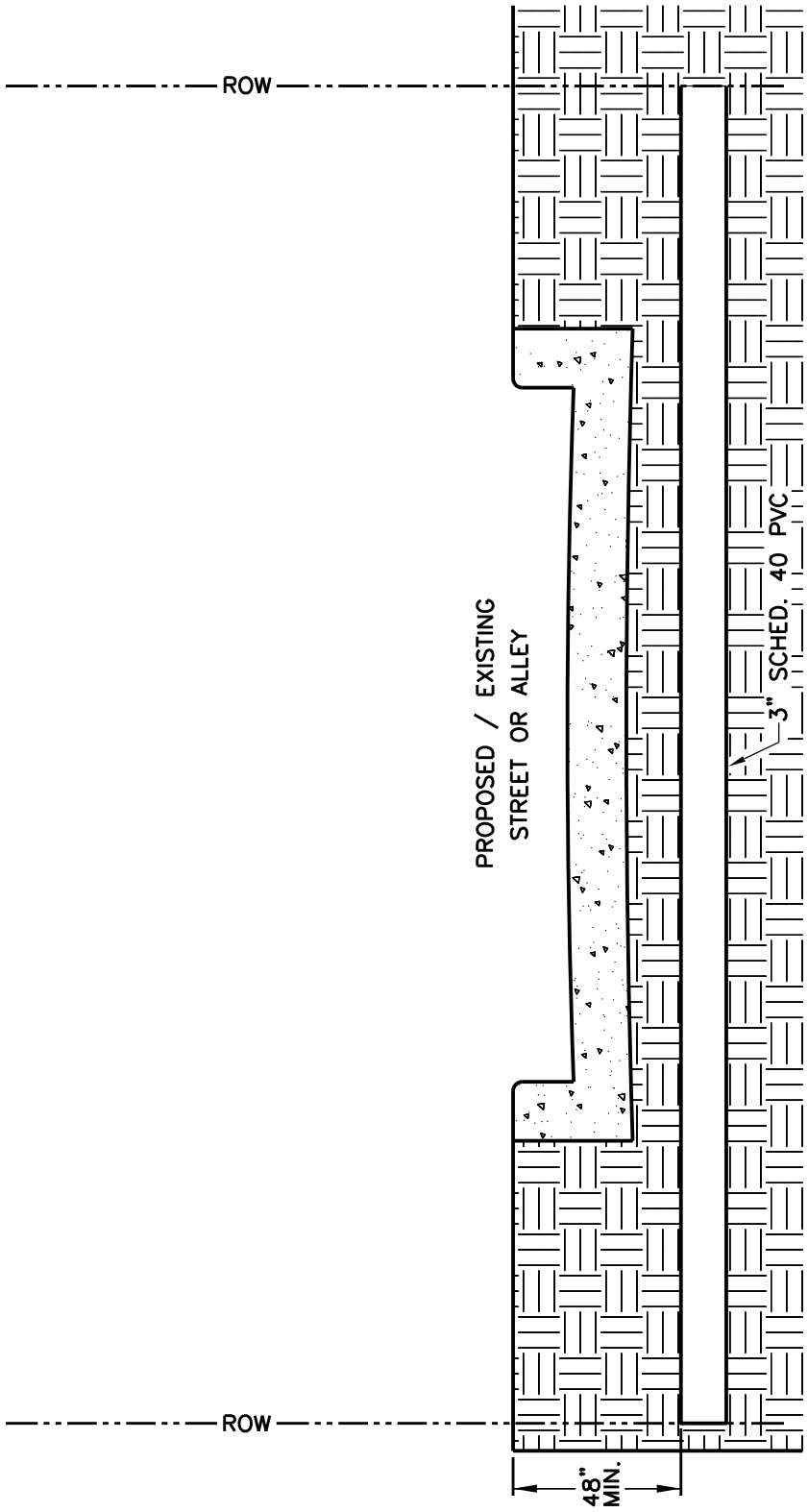

4/8

Revision Date:

Scale : N/A	Date : 04/17/06	GARLAND ENGINEERING STANDARD DETAILS	TYP. RESIDENTIAL STREET AND ALLEY CONDUIT CROSSING
Design :			
Drawn : JC			
Dwg. File : CONDUITCRSSNG.DWG			
Project No. : STANDARD-DETAILS			

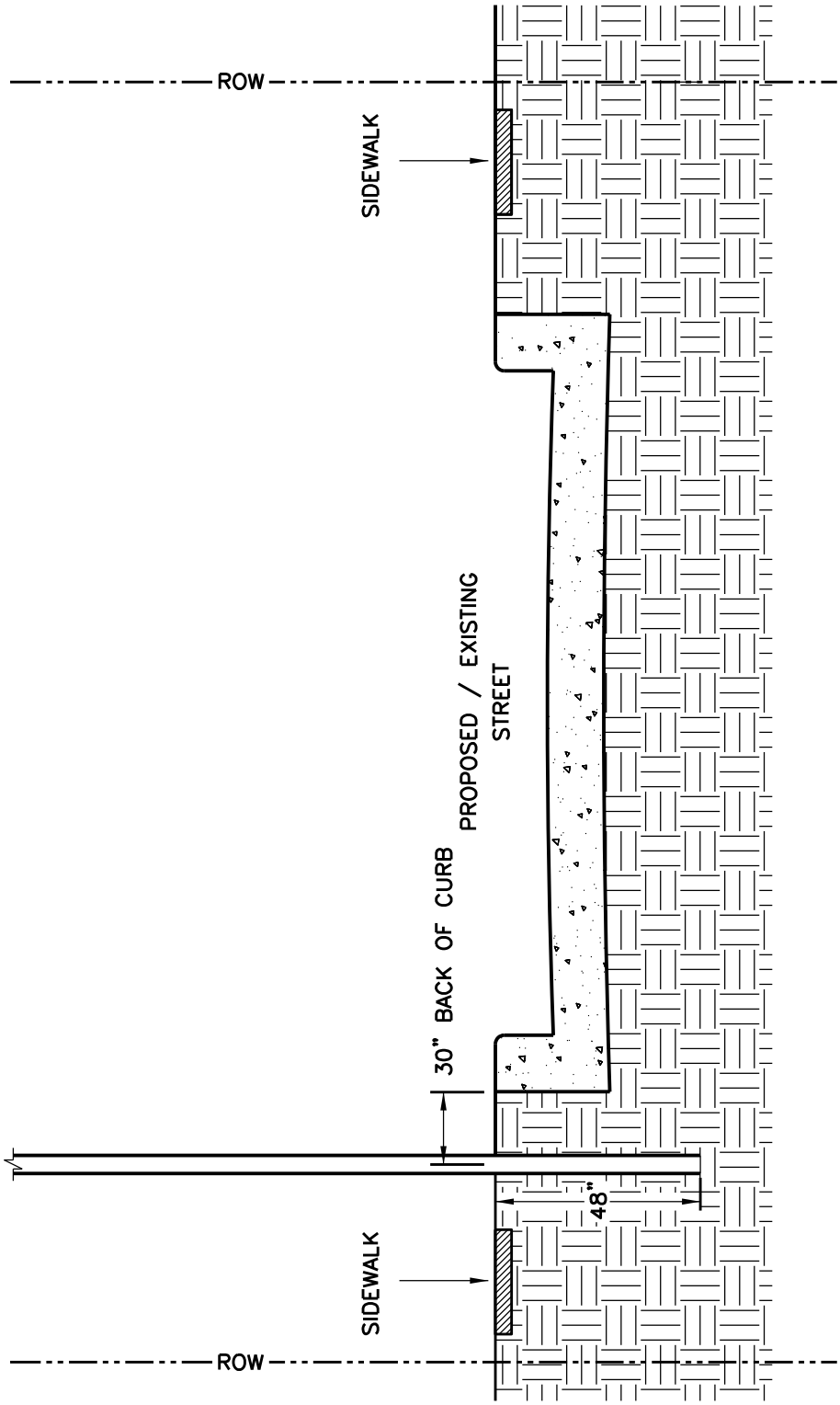

5/8

Revision Date:

Scale : N/A	Date : 04/17/06	GARLAND ENGINEERING STANDARD DETAILS	TYP. RESIDENTIAL STREET LIGHT POLE INSTALLATION PROFILE
Design :			
Drawn : JC			
Dwg. File : STLIGHTPROFILE.DWG			
Project No. : STANDARD-DETAILS			

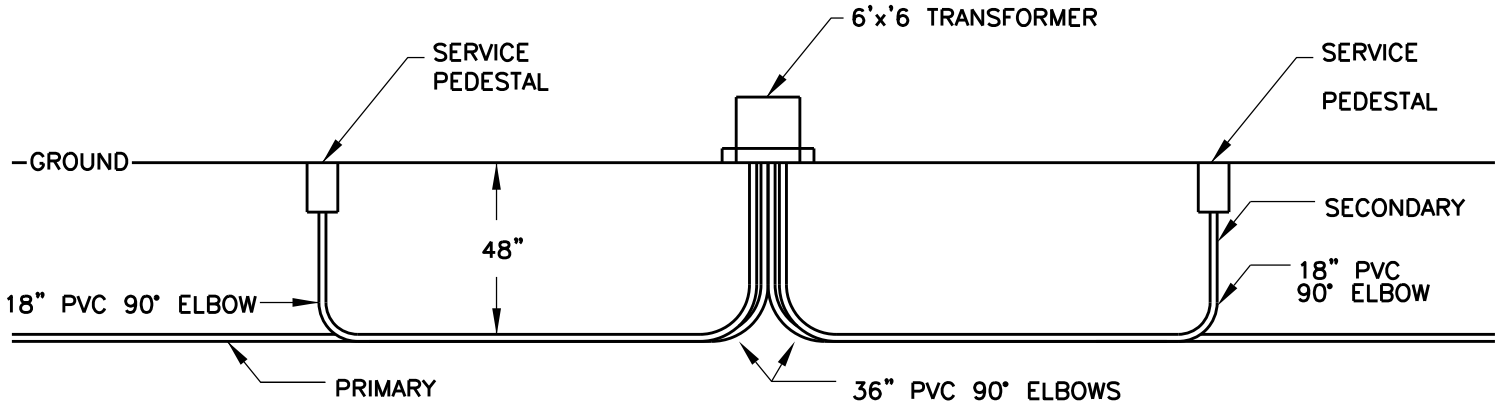

NOTE:
ALL CONDUIT MUST BE
3" SCH. 40 ELECTRIC

TYP. RESIDENTIAL TRANSFORMER PRIMARY & SECONDARY PROFILE FOR FRONT AND ALLEY SERVICES

GARLAND ENGINEERING

STANDARD DETAILS

Scale : N/A	Date : 04/18/06
Design :	
Drawn : JC	
Dwg. File : RES_TRANSFORMER.DWG	
Project No. : STANDARD-DETAILS	

Revision Date:

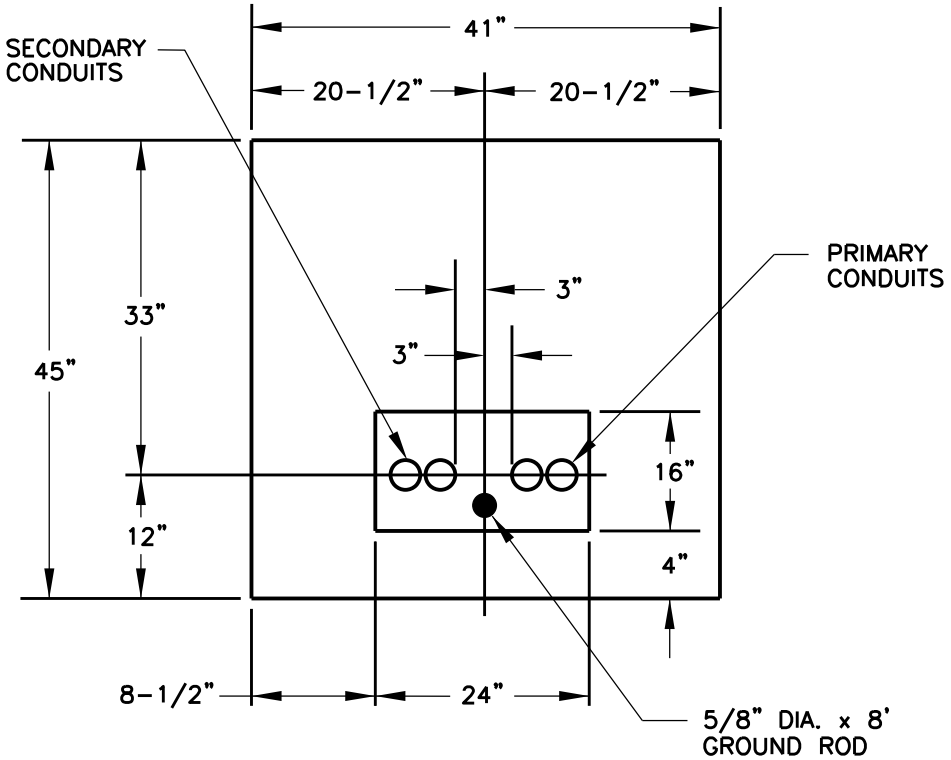

7/8

Revision Date:

Scale : N/A Date : 04/18/06	GARLAND ENGINEERING STANDARD DETAILS	PAD DETAIL FOR SINGLE PHASE TRANSFORMER	PAGE 10
Design :			
Drawn : JC			
Dwg. File : PAD_DETAIL.DWG			
Project No. : STANDARD-DETAILS			

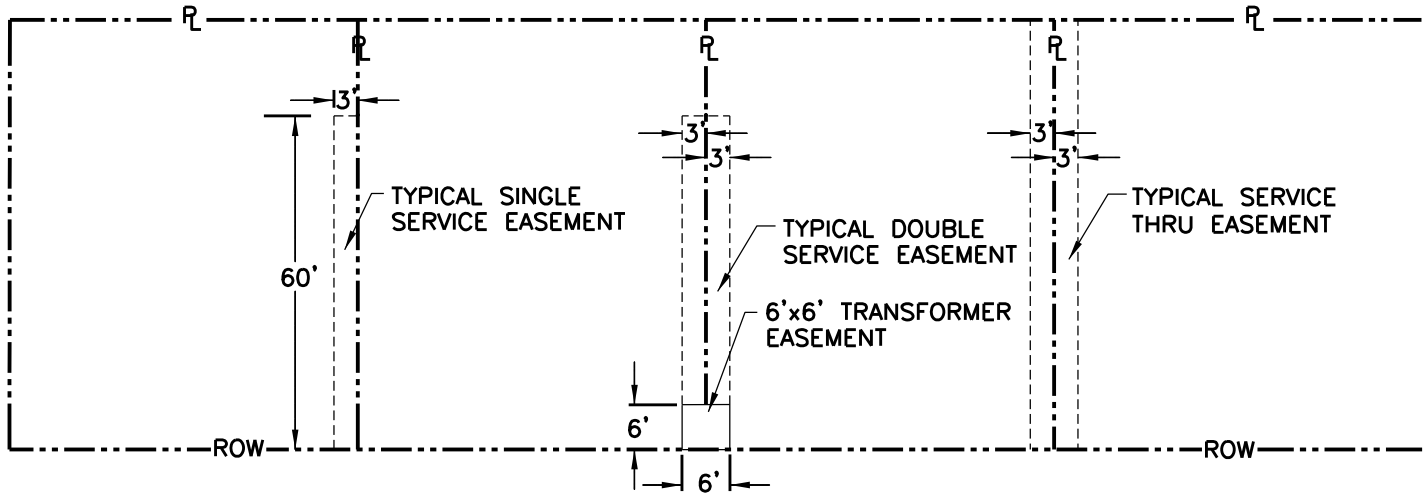

LEGEND:

TRANSFORMER

PROPERTY LINE PL

NOTE:
AN ADDITIONAL 10' EASEMENT
WILL BE REQUIRED IN ALL
FRONT SERVICE SUB-DIVISIONS

Revision Date:

Scale : N/A
Date : 04/18/06
Design :
Drawn : JC
Dwg. File : ELEC_EASEMENTS.DWG
Project No. : STANDARD-DETAILS

GARLAND
ENGINEERING

STANDARD DETAILS

TYP. RESIDENTIAL ELECTRIC SERVICE EASEMENTS