*THE SUBGRADE AND PAVEMENT THICKNESS SHOWN HERE IS ONLY APPLICABLE IF AN ON-SITE GEOTECHNICAL INVESTIGATION IS PERFORMED PROVING OUT ALL SITE PERAMETERS AND DESIGN REQUIREMENTS MEET OR EXCEED THOSE SET FORTH IN THE TSM SECTION 9.

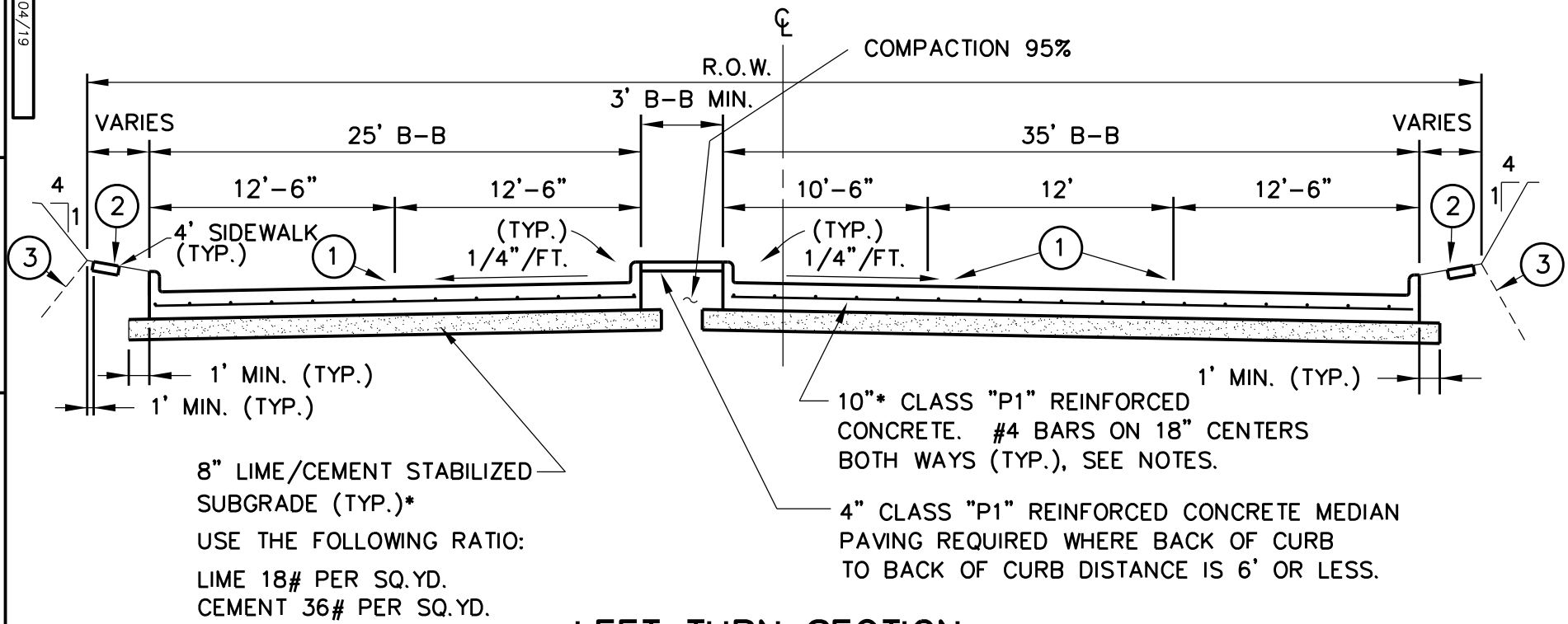

LEFT TURN SECTION

NOTES:

1. MIN. PAVEMENT DEPTH AND STRENGTH SHALL BE 10" - CLASS "P1".
2. MIN. PAVEMENT DEPTH FOR MAJOR ARTERIALS (TYPES A & B) SHALL BE 11".

① SAWED & SEALED LONGITUDINAL CONTRACTION JOINT OR CONSTRUCTION JOINT.

② SLOPE OF PARKWAY IS 2% MIN. CROSS SLOPE OF SIDEWALK IS 1% MAX.

③ SLOPE EXCEEDING 4:1 ONLY ALLOWED WITH STABILITY ANALYSIS.

STABILIZATION OF DISTURBED AREAS PRIOR TO FINAL ACCEPTANCE:

PUBLIC RIGHT-OF-WAY, EASEMENTS, AND COMMON AREAS MUST BE STABILIZED WITH PERENNIAL VEGETATION COVER, FULLY ESTABLISHED WITH 100% COVERAGE, OR OTHER APPROVED STABILIZATION METHOD.

Revision Date: 04/19

Scale : N/A Date : 06/01/05
Design :
Drawn : GAV
Dwg. File : PAV_001.DWG
Project No. : STANDARD-DETAILS

GARLAND ENGINEERING
STANDARD DETAILS

FOUR-LANE DIVIDED STREET

CURVE 1 (SEE LEFT TURN LANE DETAIL)

$\Delta = 11^\circ 28' 40''$
R = 250.00'
T = 25.13'
L = 50.08'

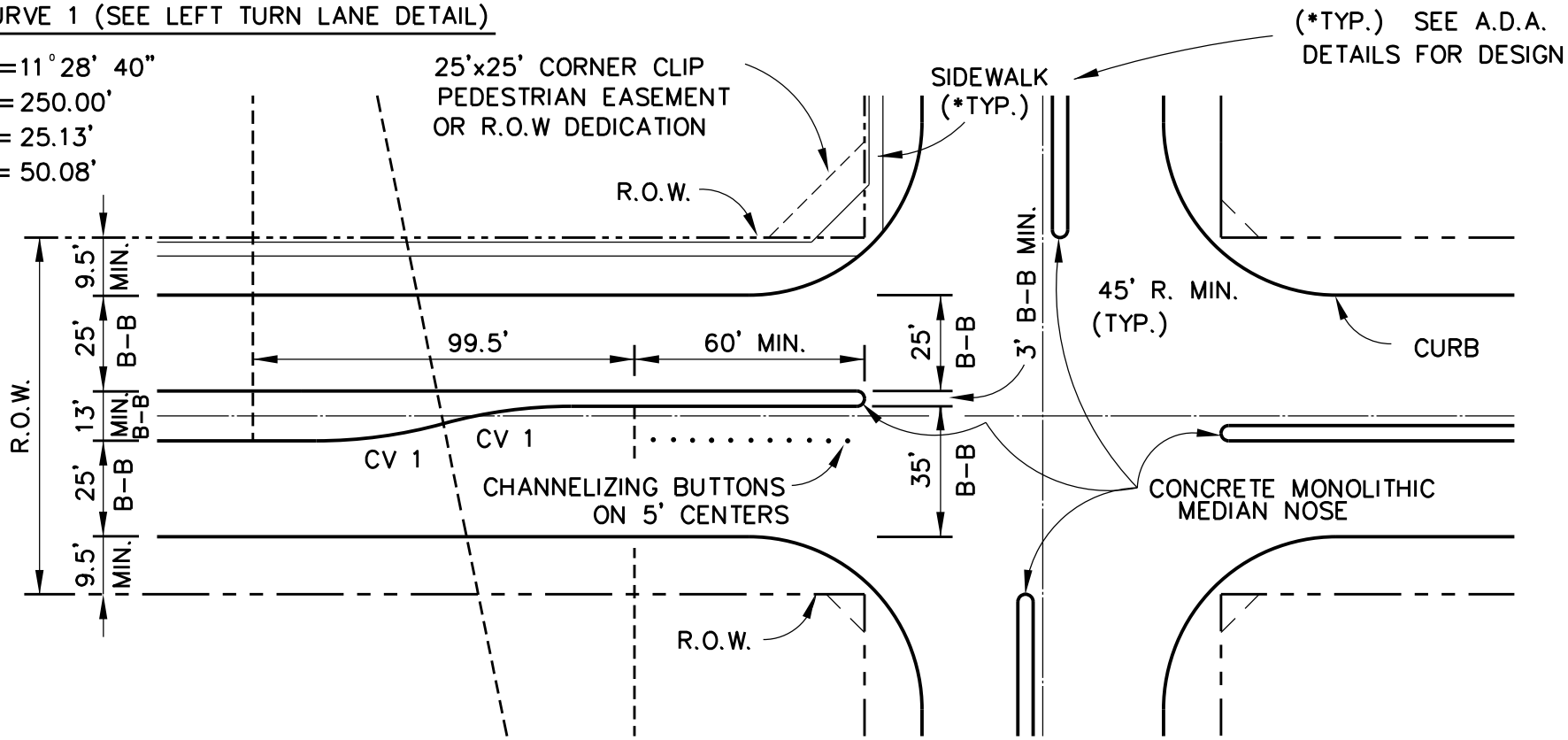

PLAN

NOTES:

1. MIN. PAVEMENT DEPTH AND STRENGTH SHALL BE 10" – CLASS "P1".
2. MIN. PAVEMENT DEPTH FOR MAJOR ARTERIALS (TYPES A & B) SHALL BE 11".

STABILIZATION OF DISTURBED AREAS PRIOR TO FINAL ACCEPTANCE:

PUBLIC RIGHT-OF-WAY, EASEMENTS, AND COMMON AREAS MUST BE STABILIZED WITH PERENNIAL VEGETATION COVER, FULLY ESTABLISHED WITH 100% COVERAGE, OR OTHER APPROVED STABILIZATION METHOD.

Revision Date: 04/19

Scale : N/A Date : 06/01/05
Design :
Drawn : GAV
Dwg. File : PAV_001.DWG
Project No. : STANDARD-DETAILS

GARLAND ENGINEERING
STANDARD DETAILS

FOUR-LANE DIVIDED STREET

*THE SUBGRADE AND PAVEMENT THICKNESS SHOWN HERE IS ONLY APPLICABLE IF AN ON-SITE GEOTECHNICAL INVESTIGATION IS PERFORMED PROVING OUT ALL SITE PERAMETERS AND DESIGN REQUIREMENTS MEET OR EXCEED THOSE SET FORTH IN THE TSM SECTION 9.

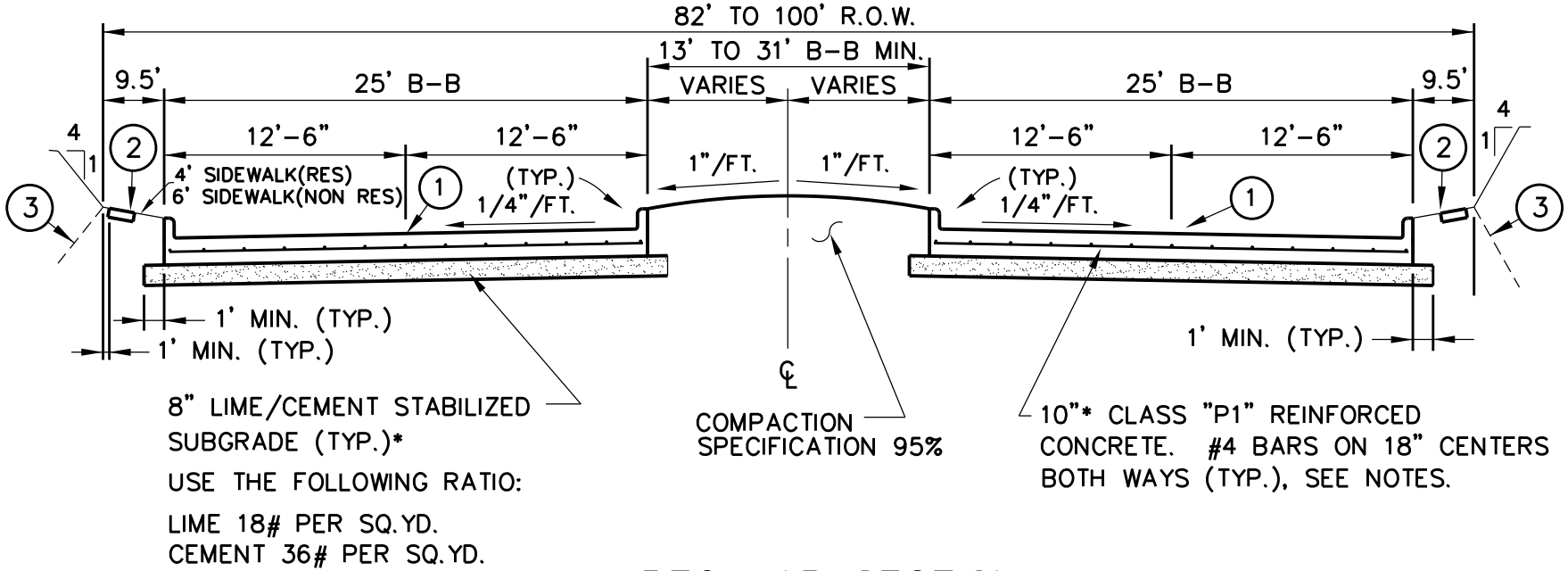

REGULAR SECTION

NOTES:

1. MIN. PAVEMENT DEPTH AND STRENGTH SHALL BE 10" - CLASS "P1".
2. MIN. PAVEMENT DEPTH FOR MAJOR ARTERIALS (TYPES A & B) SHALL BE 11".

① SAWED & SEALED LONGITUDINAL CONTRACTION JOINT OR CONSTRUCTION JOINT.

② SLOPE OF PARKWAY IS 2% MIN. CROSS SLOPE OF SIDEWALK IS 1% MAX.

③ SLOPE EXCEEDING 4:1 ONLY ALLOWED WITH STABILITY ANALYSIS.

STABILIZATION OF DISTURBED AREAS PRIOR TO FINAL ACCEPTANCE:

PUBLIC RIGHT-OF-WAY, EASEMENTS, AND COMMON AREAS MUST BE STABILIZED WITH PERENNIAL VEGETATION COVER, FULLY ESTABLISHED WITH 100% COVERAGE, OR OTHER APPROVED STABILIZATION METHOD.

Revision Date: 04/19

Scale : N/A Date : 06/01/05
Design :
Drawn : GAV
Dwg. File : PAV_001.DWG
Project No. : STANDARD-DETAILS

GARLAND ENGINEERING
STANDARD DETAILS

FOUR-LANE DIVIDED STREET

3/3

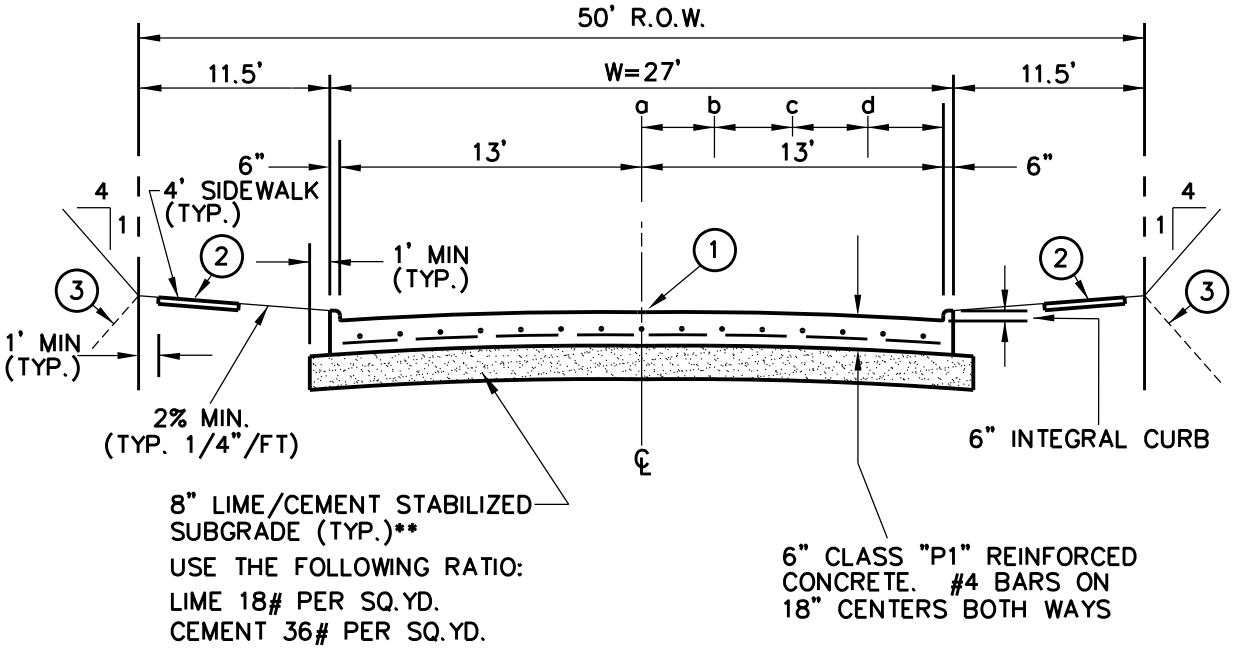

① INDICATES SAWED & SEALED LONGITUDAL CONTRACTION OR CONSTRUCTION JOINT.

② SIDEWALK CROSS SLOPE 1% MAX.

③ SLOPE EXCEEDING 4:1 ONLY ALLOWED WITH STABILITY ANALYSIS.

** THE SUBGRADE AND PAVEMENT THICKNESS SHOWN HERE IS ONLY APPLICABLE IF AN ON-SITE GEOTECHNICAL INVESTIGATION IS PERFORMED PROVING OUT ALL SITE PARAMETERS AND DESIGN REQUIREMENTS MEET OR EXCEED THOSE SET FORTH IN THE TSM SECTION 9.

TYPE (*)	STREET WIDTH (W)	R.O.W. WIDTH	PARABOLIC CROWN HEIGHT
G	27' B-B	50'	5"

(*) PER C.O.G. MAJOR THOURGHFARE PLAN

PARABOLIC CROWN ORDINATES TABLE HEIGHT ABOVE GUTTER			
Total Crown	1/4 POINT	MID POINT	3/4 POINT
(a)	(b)	(c)	(d)
5"	4-11/16"	3-3/4"	2-3/16"

NOTES:

1. ALL REINFORCEMENT SHALL BE #4 BARS ON 18" CENTERS BOTH WAYS, EXCEPT WHERE NOTED.
2. PAVEMENT SHALL BE CLASS "P1" CONCRETE.

STABILIZATION OF DISTURBED AREAS PRIOR TO FINAL ACCEPTANCE:

PUBLIC RIGHT-OF-WAY, EASEMENT, AND COMMON AREAS MUST BE STABILIZED WITH PERENNIAL VEGETATION COVER, FULLY ESTABLISHED WITH 100% COVERAGE, OR OTHER APPROVED STABILIZATION METHOD.

1/1

Revision Date: 04/19

Scale : N/A Date : 06/01/05	GARLAND ENGINEERING STANDARD DETAILS	TYPICAL RESIDENTIAL PAVING SECTION	PAGE 4
Design :			
Drawn : GAV			
Dwg. File : PAV_002.DWG			
Project No. : STANDARD-DETAILS			

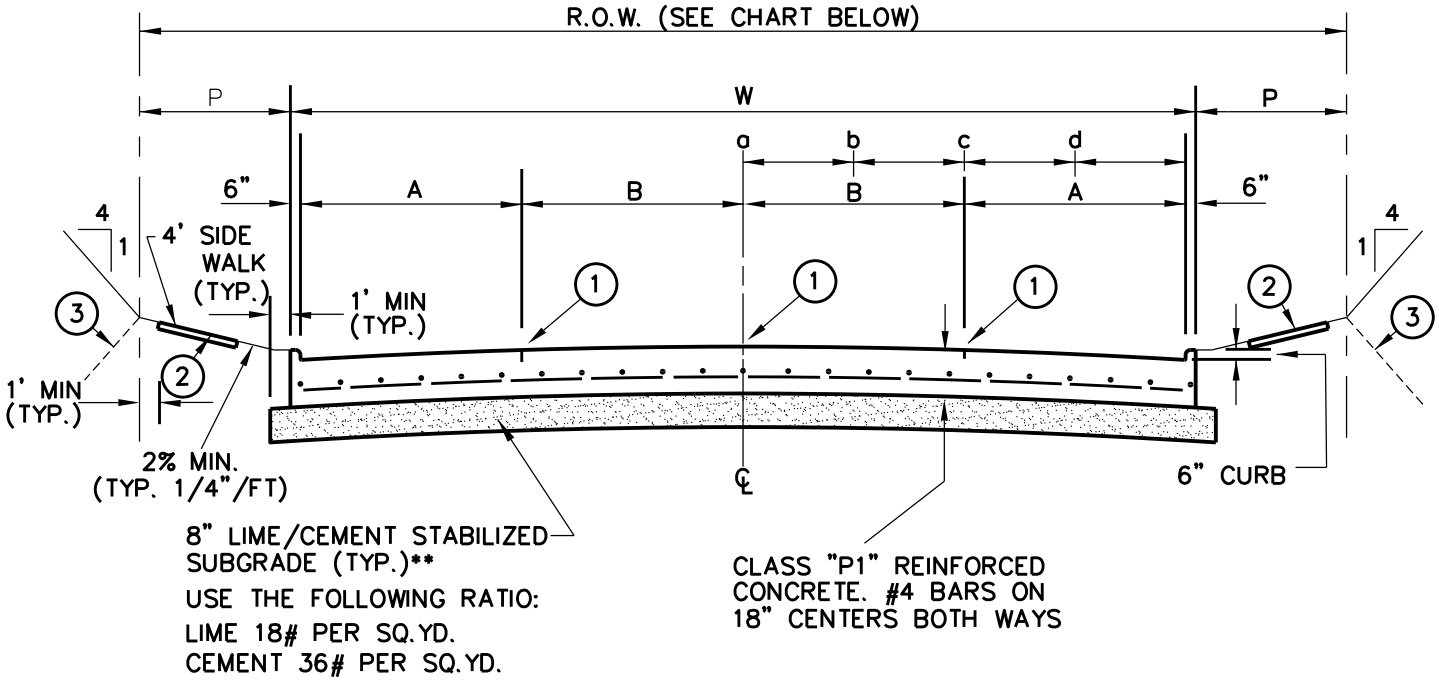

① INDICATES SAWED & SEALED LONGITUDAL CONTRACTION OR CONSTRUCTION JOINT.

② SIDEWALK CROSS SLOPE 1% MAX.

③ SLOPE EXCEEDING 4:1 ONLY ALLOWED WITH STABILITY ANALYSIS.

** THE SUBGRADE AND PAVEMENT THICKNESS SHOWN HERE IS ONLY APPLICABLE IF AN ON-SITE GEOTECHNICAL INVESTIGATION IS PERFORMED PROVING OUT ALL SITE PARAMETERS AND DESIGN REQUIREMENTS MEET OR EXCEED THOSE SET FORTH IN THE TSM SECTION 9.

TYPE (*)	STREET WIDTH (W)	A	B	R.O.W. WIDTH	P	PARABOLIC CROWN HEIGHT	MIN. PAVING THICKNESS
G	27' B-B	0'	13'	50'	11.5'	5"	6"
F	37' B-B (RES)	8'	10'	60'	11.5'	6"	7"
F	37' B-B (COM)	8'	10'	60'	11.5'	7"	8"
E	45' B-B	11'	11'	80'	17.5'	8"	10"
D2	61' B-B	10'	10'	80'	9.5'	8"	9"
D1	62' B-B	10.5'	10'	82'	10'	8"	10"

(*) PER C.O.G. MAJOR THOURGHFARE PLAN

PARABOLIC CROWN ORDINATES TABLE HEIGHT ABOVE GUTTER			
Total Crown	1/4 POINT	MID POINT	3/4 POINT
(a)	(b)	(c)	(d)
5"	4-11/16"	3-3/4"	2-3/16"
6"	5-5/8"	4-1/2"	2-5/8"
7"	6-9/16"	5-1/4"	3-1/16"
8"	7-1/2"	6"	3-1/2"

NOTES:

1. ALL REINFORCEMENT SHALL BE #4 BARS ON 18" CENTERS BOTH WAYS, EXCEPT WHERE NOTED.
2. PAVEMENT SHALL BE CLASS "P1" CONCRETE.

STABILIZATION OF DISTURBED AREAS PRIOR TO FINAL ACCEPTANCE:

PUBLIC RIGHT-OF-WAY, EASEMENT, AND COMMON AREAS MUST BE STABILIZED WITH PERENNIAL VEGETATION COVER, FULLY ESTABLISHED WITH 100% COVERAGE, OR OTHER APPROVED STABILIZATION METHOD.

1/1

Revision Date: 04/19

Scale : N/A Date : 06/01/05	GARLAND ENGINEERING STANDARD DETAILS	TYPICAL PAVING SECTION	PAGE 5
Design :			
Drawn : GAV			
Dwg. File : PAV_003.DWG			
Project No. : STANDARD-DETAILS			

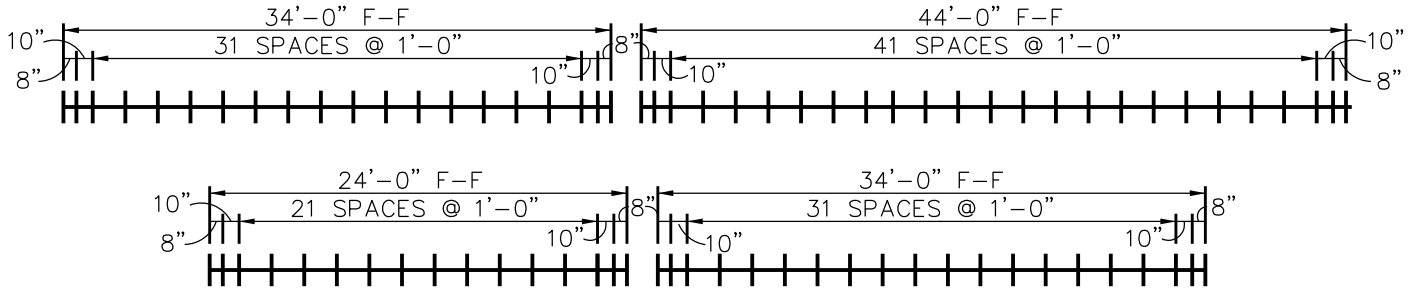

MAJOR STREETS

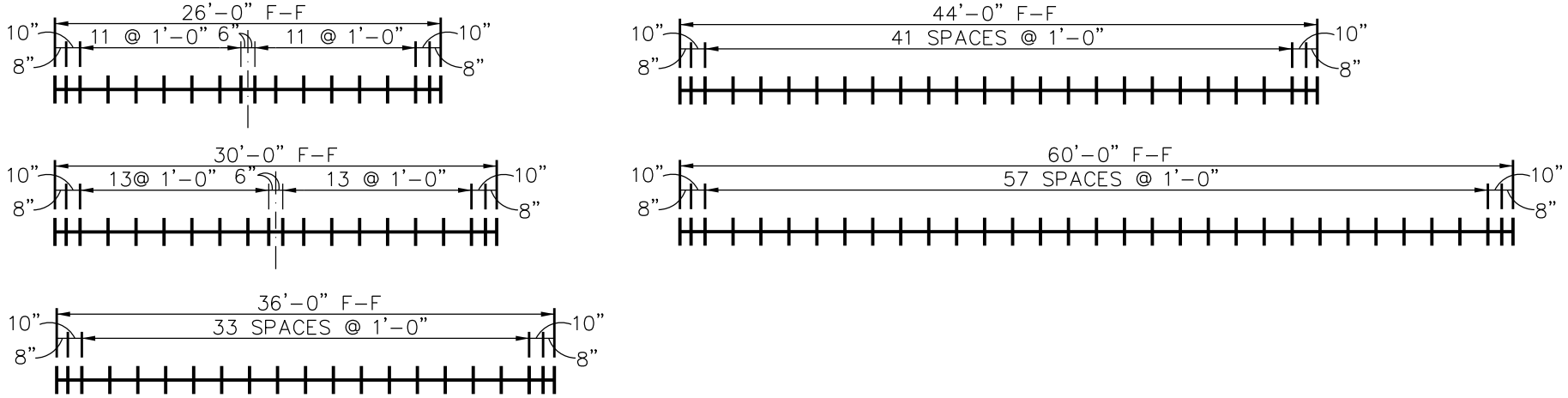

LOCAL & COLLECTOR STREETS

SPACING DIAGRAM FOR DOWELS AT EXPANSION JOINTS

NOTE:

1. SEE HEADER AND JOINT DETAILS FOR DOWEL TYPE AND SIZE.
2. OUTSIDE REBAR SHALL BE PLACED 6" FROM BACK OF CURB.
3. LINES SHOWN ARE FOR GRAPHICAL REPRESENTATION ONLY. REFER TO DIMENSIONS AND LABELS FOR ACTUAL NUMBER OF DOWELS AND DOWEL SPACING.

1
1

Revision Date: 04/19

Scale : N/A Date : 06/01/05
Design :
Drawn : JMK
Dwg. File : PAV_004.DWG
Project No. : STANDARD-DETAILS

GARLAND ENGINEERING
STANDARD DETAILS

PAVING DETAILS
SPACING DIAGRAM FOR
DOWELS AT EXPANSION JOINTS

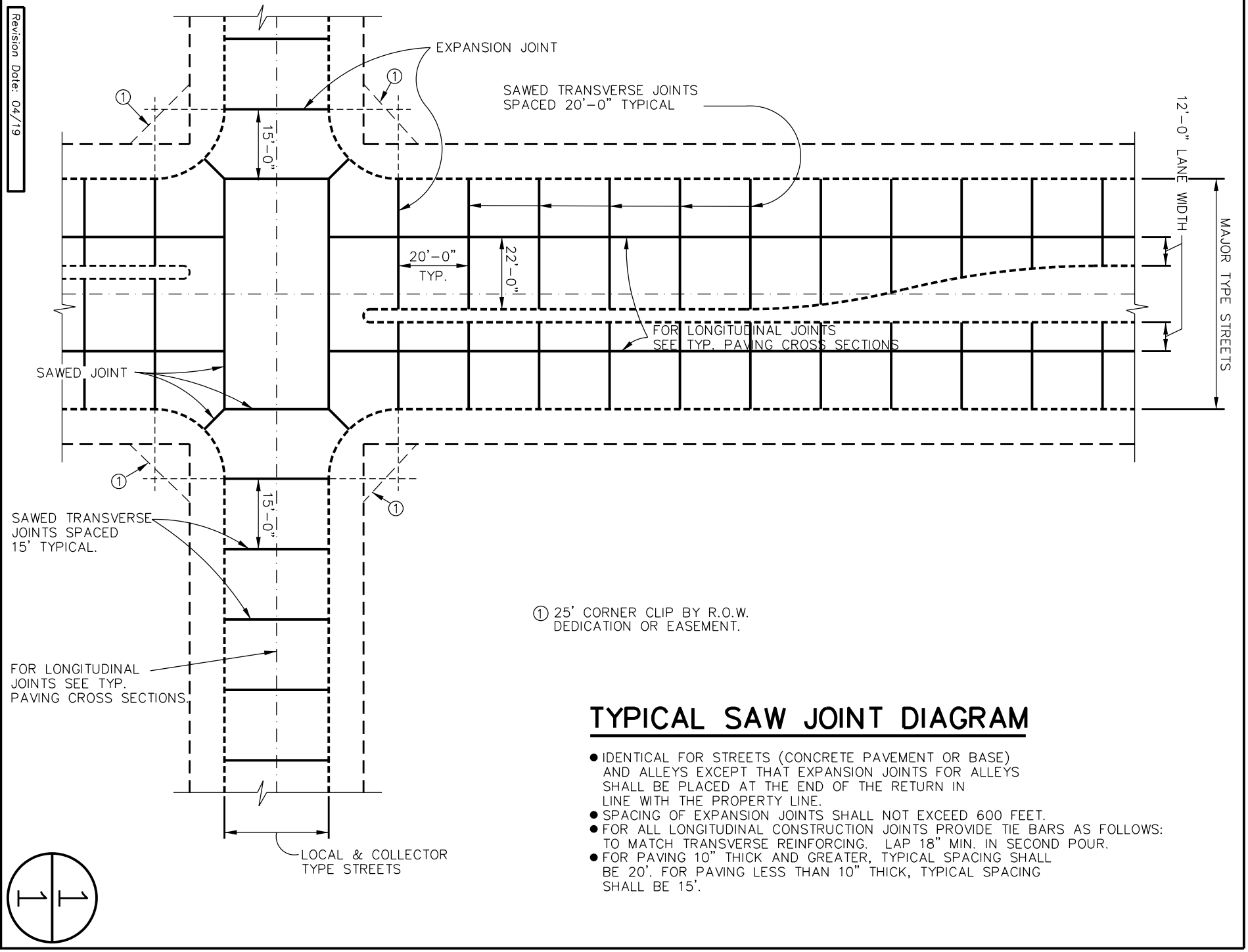

TYPICAL SAW JOINT DIAGRAM

- IDENTICAL FOR STREETS (CONCRETE PAVEMENT OR BASE) AND ALLEYS EXCEPT THAT EXPANSION JOINTS FOR ALLEYS SHALL BE PLACED AT THE END OF THE RETURN IN LINE WITH THE PROPERTY LINE.
- SPACING OF EXPANSION JOINTS SHALL NOT EXCEED 600 FEET.
- FOR ALL LONGITUDINAL CONSTRUCTION JOINTS PROVIDE TIE BARS AS FOLLOWS: TO MATCH TRANSVERSE REINFORCING. LAP 18" MIN. IN SECOND POUR.
- FOR PAVING 10" THICK AND GREATER, TYPICAL SPACING SHALL BE 20'. FOR PAVING LESS THAN 10" THICK, TYPICAL SPACING SHALL BE 15'.

Revision Date: 04/19

Scale : N/A Date : 06/01/05
Design :
Drawn : JMK
Dwg. File : PAV_005.DWG
Project No. : STANDARD-DETAILS

GARLAND ENGINEERING
STANDARD DETAILS

PAVING DETAILS
SPACING DIAGRAM FOR JOINTS

1/1

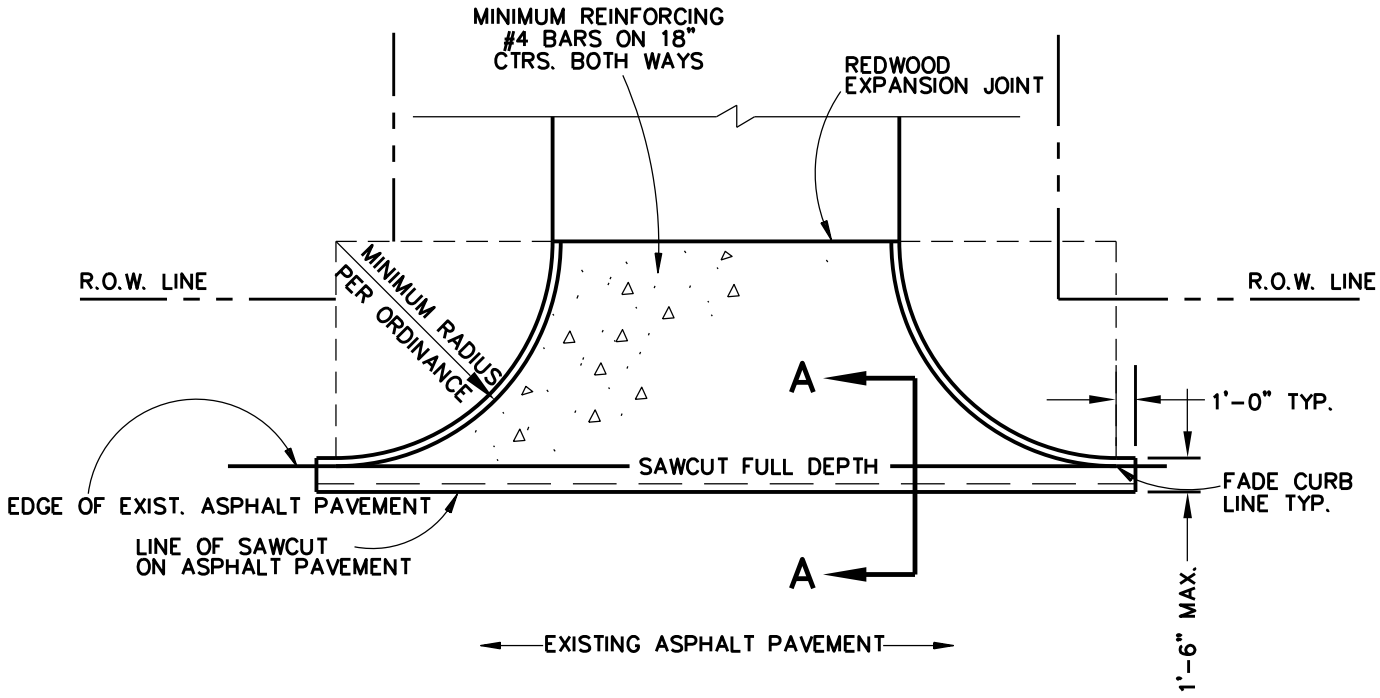

CONCRETE TO ASPHALT ROADWAY TEE INTERSECTION OR DRIVEWAY APPROACH

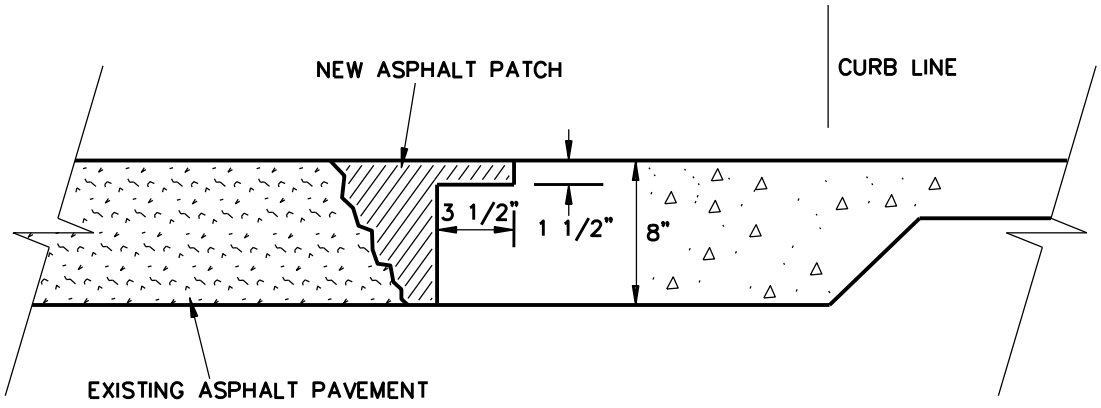

SECTION A–A

1
1

Revision Date: 04/19

Scale : N/A Date : 06/01/05	GARLAND ENGINEERING STANDARD DETAILS	CONCRETE TO ASPHALT ROADWAY TEE INTERSECTION	PAGE 8
Design :			
Drawn : JMK			
Dwg. File : PAV_006.DWG			
Project No. : STANDARD–DETAILS			

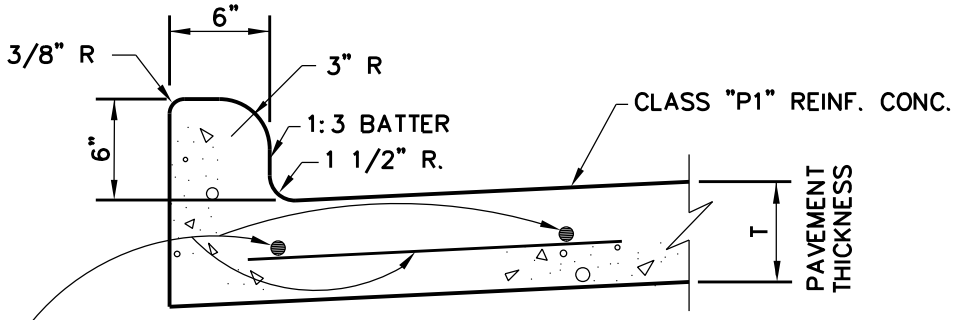

INTEGRAL CURB & GUTTER

NO SCALE

#4 BARS ON 18" O.C.E.W.

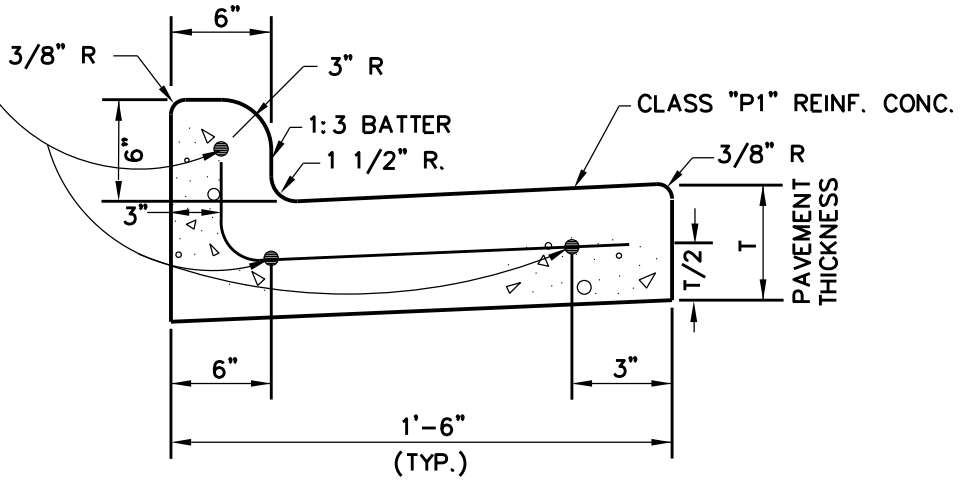

SEPARATE CURB & GUTTER

NO SCALE

NOTE: GUTTER LINE MUST BE 18" FROM BACK OF CURB

#4 BARS ON 18" O.C.E.W.

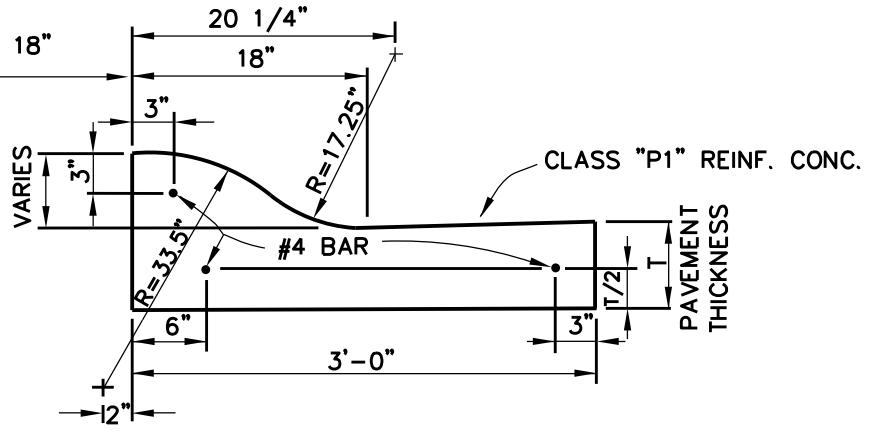

MOUNTABLE MONOLITHIC CURB

NO SCALE

1/1

Revision Date: 04/19

Scale : N/A Date : 06/01/05	GARLAND ENGINEERING STANDARD DETAILS	INTEGRAL, SEPARATE, MOUNTABLE MONOLITHIC CONCRETE CURB & GUTTER	PAGE 9
Design :			
Drawn : GAV			
Dwg. File : PAV_007.DWG			
Project No. : STANDARD-DETAILS			

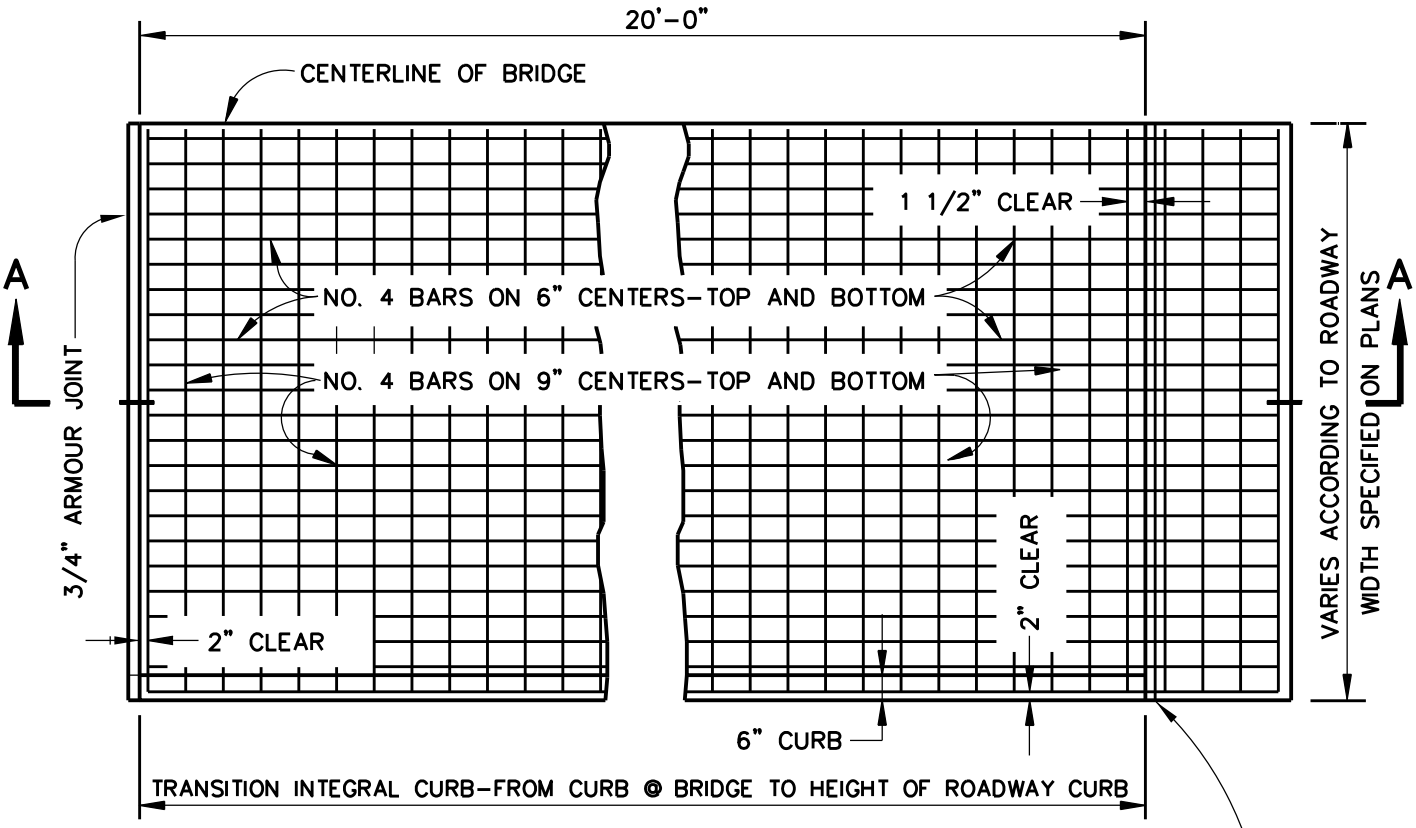

PLAN

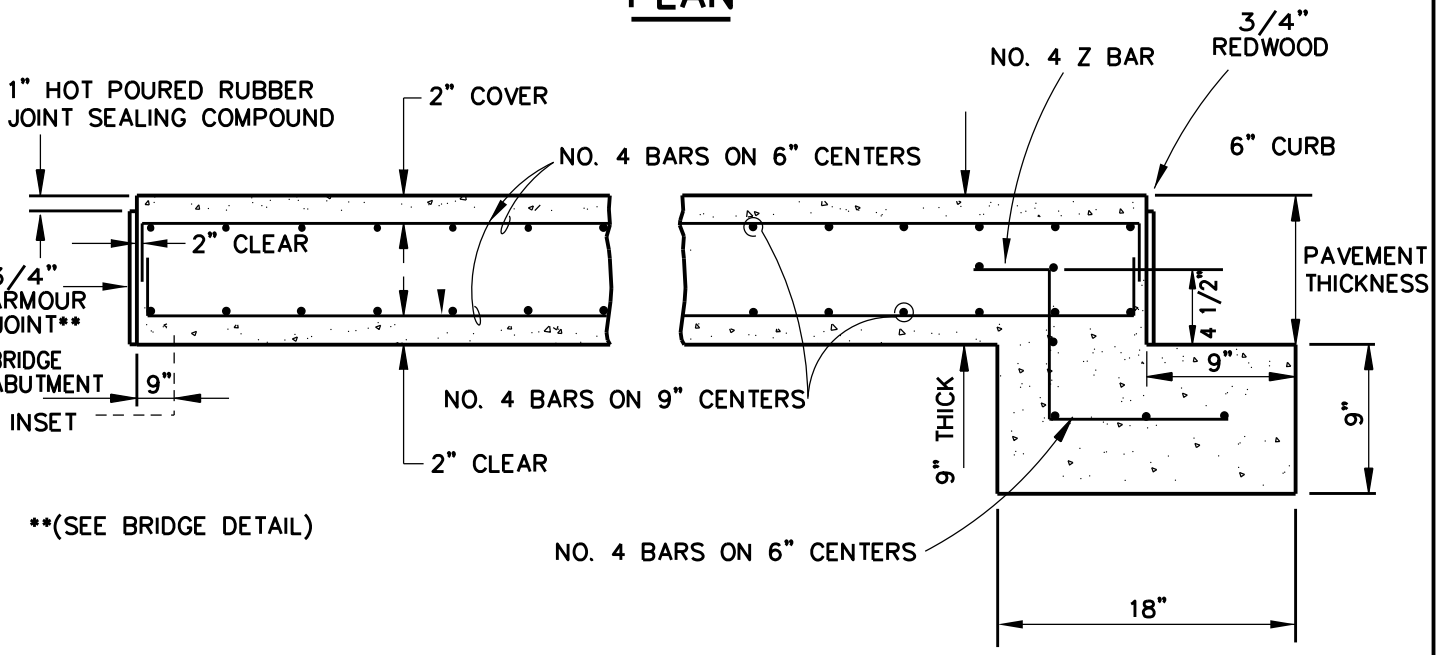

**(SEE BRIDGE DETAIL)

SECTION A-A

1/1

Revision Date:

Scale : N/A Date : 06/01/05	GARLAND ENGINEERING STANDARD DETAILS	PAVING DETAILS BRIDGE APPROACH SLAB
Design :		
Drawn : DCN		
Dwg. File : PAV_008.DWG		
Project No. : STANDARD-DETAILS		

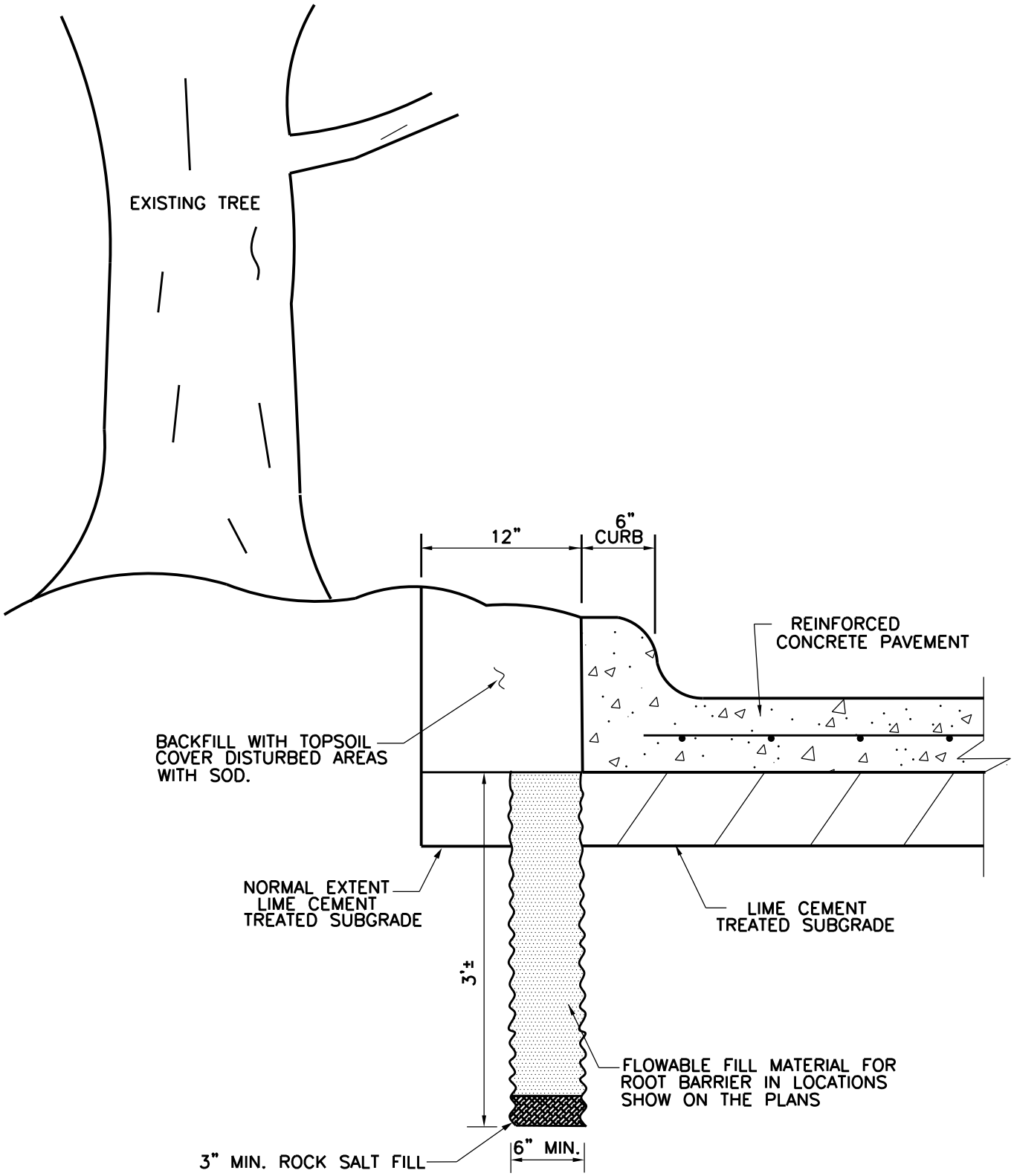

NOTE:

1. CONTRACTOR SHALL SUBMIT FLOWABLE FILL MIX DESIGN TO FIELD ENGINEERING FOR APPROVAL PRIOR TO CONSTRUCTION.

1/1

Revision Date:

Scale : N/A Date : 06/01/05	GARLAND ENGINEERING	ROOT BARRIER DETAILS
Design :		
Drawn : SEL		
Dwg. File : PAV_009.DWG		
Project No. : STANDARD-DETAILS	STANDARD DETAILS	

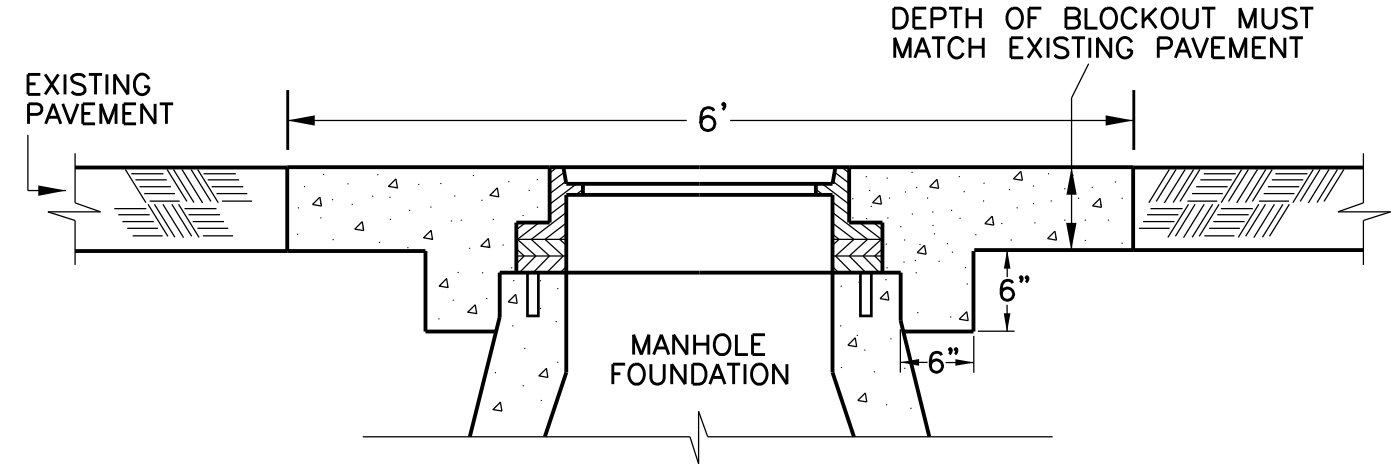

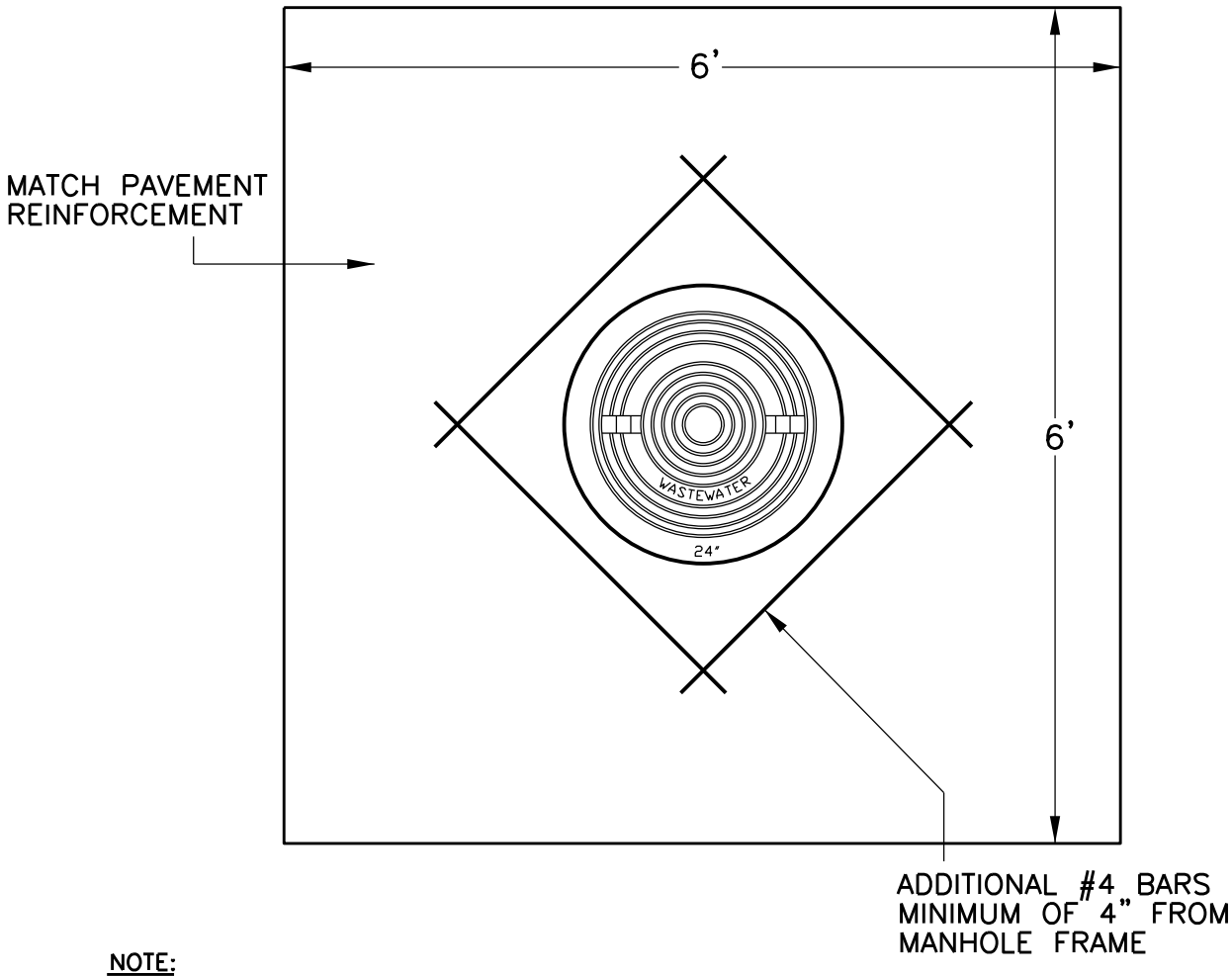

NOTE:

1. BLOCKOUTS MUST HAVE #4 L-BAR "BEND OUT" DOWELS AROUND THE BLOCKOUT AREA.
2. CONCRETE POURED IN THE BLOCKOUT MUST CONTACT THE MAIN MANHOLE FOUNDATION 6" DEEP AND 6" WIDE.
3. STEEL REINFORCEMENT FOR BLOCKOUT MUST MATCH ROADWAY REINFORCEMENT.

1/1

Revision Date: 04/19

Scale : N/A Date : 07/21/06	GARLAND ENGINEERING STANDARD DETAILS	WASTEWATER MANHOLE BLOCKOUTS FOR ALL NEW PAVEMENT	PAGE 12
Design :			
Drawn : JMK			
Dwg. File : PAV_010.DWG			
Project No. : STANDARD-DETAILS			